LIST OF WATER DETAIL DRAWINGS

W#	TITLE
W-1	SINGLE RESIDENTIAL WATER SERVICE - NEW DEVELOPMENT - LINE PRESSURE UNDER 120 PSI
W-2	SINGLE RESIDENTIAL WATER SERVICE - REPLACEMENT OF EXISTING SERVICE
W-3	SINGLE RESIDENTIAL WATER SERVICE FOR HIGH PRESSURE - LINE PRESSURE OVER 120 PSI
W-4	DOUBLE RESIDENTIAL WATER SERVICE - LINE PRESSURE UNDER 120 PSI
W-4E	DOUBLE RESIDENTIAL WATER SERVICE - REPLACEMENT OF EXISTING SERVICE
W-5	COMMERCIAL WATER SERVICE - METER SIZES 5/8" TO 2"
W-6	COMMERCIAL SEWER DEDUCTION METER INSTALLATION
W-7	COMMERCIAL METER VAULT
W-8	FIRE SERVICE VAULT FOR PRIVATE HYDRANT
W-9	WATER LINE VALVE AND VAULT
W-10	PERMANENT END OF LINE BLOW-OFF ASSEMBLY
W-11	TEMPORARY END OF LINE BLOW-OFF ASSEMBLY
W-12	IN LINE BLOW-OFF ASSEMBLY
W-13	COMBINATION AIR VALVE ASSEMBLY
W-14	MAIN LINE PRESSURE REDUCING VALVE ASSEMBLY
W-15	DEEP VALVE VAULT (MANHOLE)
W-16	VAULT FRAME AND COVER
W-17	FIRE HYDRANT ASSEMBLY
W-18	THRUST BLOCK REQUIREMENTS
W-19	MINIMUM THRUST RESTRAINT OF PIPE JOINTS DESIGN LENGTHS
W-20	TYPICAL WATER PRESSURE TEST RIG
W-21	TAPPING SLEEVE AND VALVE
W-22	DUCTILE IRON PIPE DEFLECTION ALLOWANCE TABLES
W-23	THRUST COLLAR DETAIL

1. SETTER TO BE A.Y. McDONALD 720-215WDDD33, FORD VBHH72-15W-11-33 OR APPROVED EQUAL.
2. SADDLES MUST BE USED WITH ALL PLASTIC & DUCTILE IRON PIPE. SERVICE SADDLES SHALL BE USED IN ACCORDANCE WITH WATER DISTRIBUTION PIPING SPECIFICATION. SERVICE SADDLES FOR PLASTIC PIPE SHALL BE: POWERSEAL 3417, OR 3412AS, ROMAC 202S, OR 306, OR FORD METER FS202 OR FS303. FOR DUCTILE IRON PIPE USE THE ABOVE OR POWERSEAL 3413, ROMAC 202 OR FORD METER F202.
3. METER BOX SHALL BE CARSON/MID-STATES PLASTICS, INC. PLASTIC BOX WITH FORD "A" DOMESTIC SERIES FRAME WITH A NICOR DOMESTIC 12.25 CX LID WITH SENSUS RECESS AND WVWA LOGO, ADS CORRUGATED HDPE BOX WITH FORD "A" DOMESTIC SERIES FRAME WITH A NICOR DOMESTIC 12.25 CX LID WITH SENSUS RECESS AND WVWA LOGO OR APPROVED EQUAL. METER BOX SHALL NOT BE PLACED IN AREAS SUBJECT TO VEHICULAR TRAFFIC. IF TRAFFIC BEARING BOX IS REQUIRED, DESIGN ENGINEER SHALL CONSULT WITH PARTICIPATING UTILITY TO DETERMINE SITE SPECIFIC REQUIREMENTS.
4. CORPORATION STOP SHALL BE FORD FB1000-4-G-NL, MUELLER B-25008 OR APPROVED EQUAL.
5. SERVICE SHALL BE "K" TYPE COPPER, OR COPPER TUBE SIZE POLYETHYLENE (PE) 4710, SODR-9 (200 psi).
6. WHENEVER SIDEWALK EXISTS OR IS PROPOSED, MODIFY METER LOCATION AS DIRECTED.

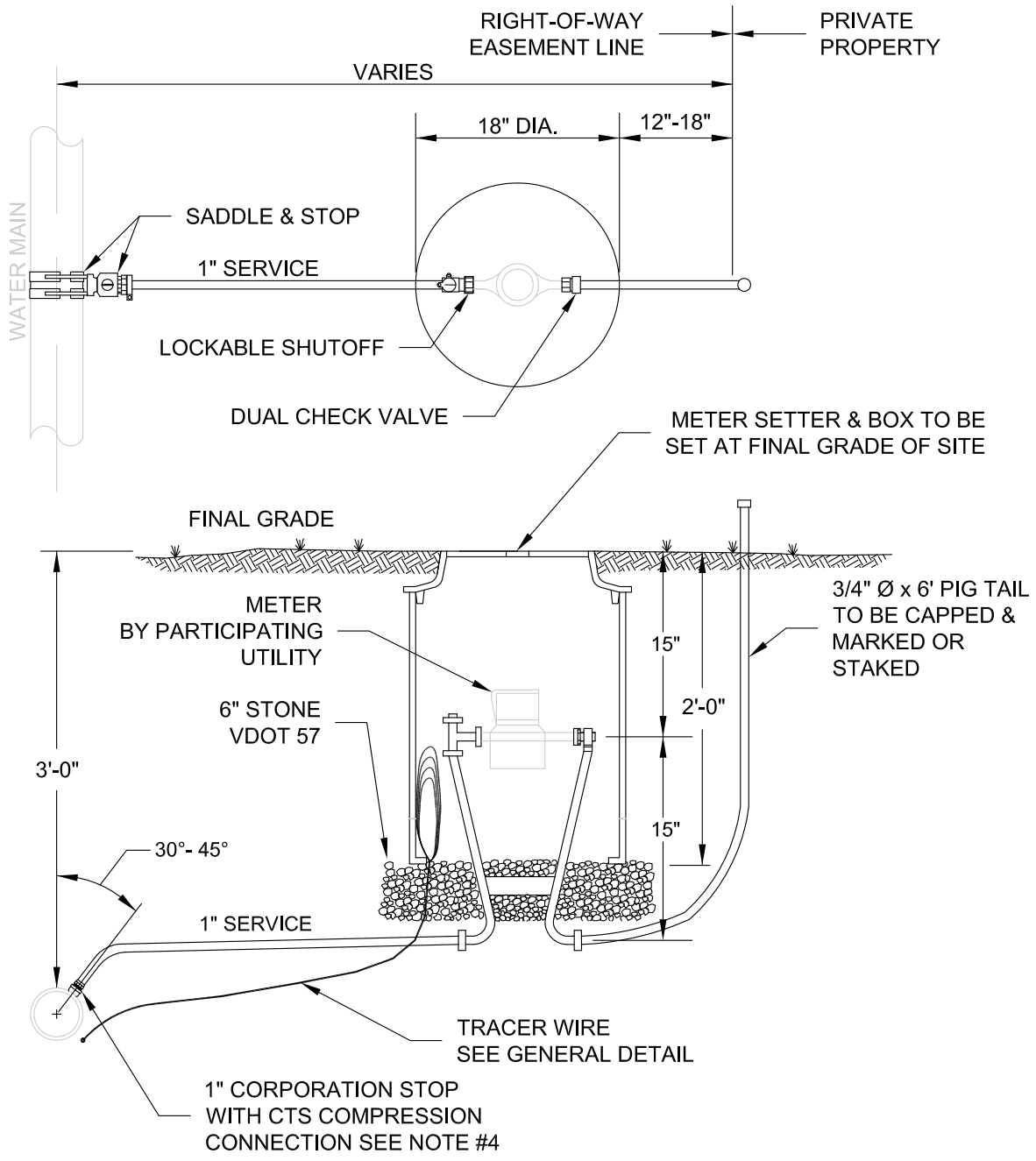

WESTERN VIRGINIA REGIONAL - CONSTRUCTION DETAIL

SINGLE RESIDENTIAL
WATER SERVICE - (NEW DEVELOPMENT)
(LINE PRESSURE UNDER 120 PSI)

09/07/17

W-1

1. SETTER TO BE A.Y. McDONALD 720-215WXDD33, FORD VB72-15W-11-33 OR APPROVED EQUAL.
2. SADDLES MUST BE USED WITH ALL PLASTIC & DUCTILE IRON PIPE. SERVICE SADDLES SHALL BE USED IN ACCORDANCE WITH WATER DISTRIBUTION PIPING SPECIFICATION. SERVICE SADDLES FOR PLASTIC PIPE SHALL BE: POWERSEAL 3417, OR 3412AS, ROMAC 202S, OR 306, OR FORD METER FS202 OR FS303. FOR DUCTILE IRON PIPE USE THE ABOVE OR POWERSEAL 3413, ROMAC 202 OR FORD METER F202.
3. METER BOX SHALL BE CARSON/MID-STATES PLASTICS, INC. PLASTIC BOX WITH FORD "A" DOMESTIC SERIES FRAME WITH A NICOR DOMESTIC 12.25 CX LID WITH SENSUS RECESS AND WVWA LOGO, ADS CORRUGATED HDPE BOX WITH FORD "A" DOMESTIC SERIES FRAME WITH A NICOR DOMESTIC 12.25 CX LID WITH SENSUS RECESS AND WVWA LOGO OR APPROVED EQUAL. METER BOX SHALL NOT BE PLACED IN AREAS SUBJECT TO VEHICULAR TRAFFIC. IF TRAFFIC BEARING BOX IS REQUIRED, DESIGN ENGINEER SHALL CONSULT WITH PARTICIPATING UTILITY TO DETERMINE SITE SPECIFIC REQUIREMENTS.
4. CORPORATION STOP SHALL BE FORD FB1000-4-G-NL, MUELLER B-25008 OR APPROVED EQUAL.
5. SERVICE SHALL BE "K" TYPE COPPER, OR COPPER TUBE SIZE POLYETHYLENE (PE) 4710, SODR-9 (200 psi).
6. WHENEVER SIDEWALK EXISTS OR IS PROPOSED, MODIFY METER LOCATION AS DIRECTED.

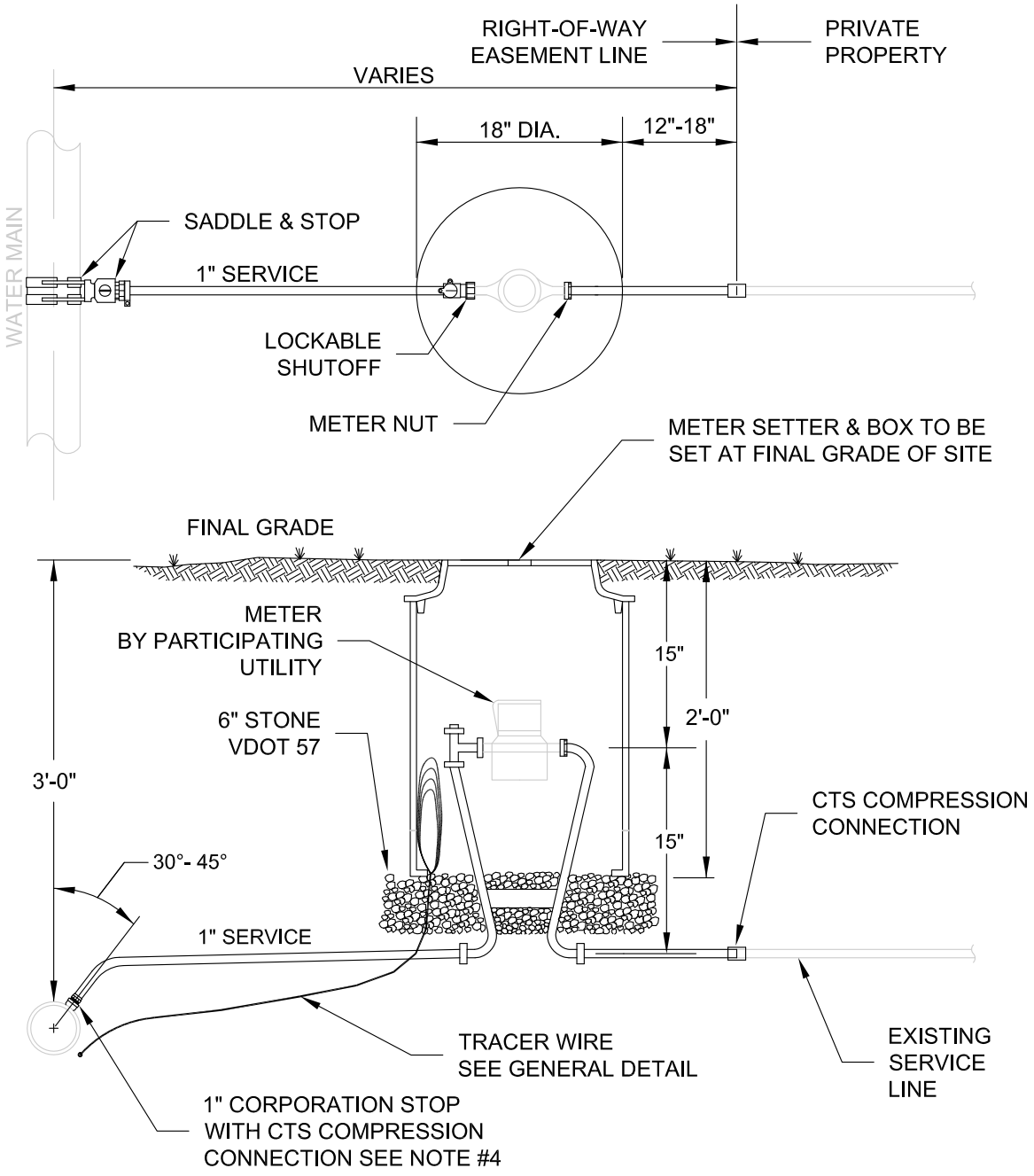

WESTERN VIRGINIA REGIONAL - CONSTRUCTION DETAIL

SINGLE RESIDENTIAL
WATER SERVICE
(REPLACEMENT OF EXISTING SERVICE)

09/07/17

W-2

1. TANDEM SETTERS TO BE A.Y. McDONALD 750-215WDDD33, FORD TVBHH72-15W-11-33 OR APPROVED EQUAL.
2. SADDLES MUST BE USED WITH ALL PLASTIC & DUCTILE IRON PIPE. SERVICE SADDLES SHALL BE USED IN ACCORDANCE WITH WATER DISTRIBUTION PIPING SPECIFICATION. SERVICE SADDLES FOR PLASTIC PIPE SHALL BE: POWERSEAL 3417, OR 3412AS, ROMAC 202S, OR 306, OR FORD METER FS202 OR FS303. FOR DUCTILE IRON PIPE USE THE ABOVE OR POWERSEAL 3413, ROMAC 202 OR FORD METER F202.
3. CORPORATION STOP SHALL BE FORD FB1000-4-G-NL, MUELLER B-25008 OR APPROVED EQUAL.
4. METER BOX SHALL BE CARSON/MID-STATES PLASTICS, INC. PLASTIC BOX WITH FORD "A" DOMESTIC SERIES FRAME WITH A NICOR DOMESTIC 12.25 CX LID WITH SENSUS RECESS AND WVWA LOGO, ADS CORRUGATED HDPE BOX WITH FORD "A" DOMESTIC SERIES FRAME WITH A NICOR DOMESTIC 12.25 CX LID WITH SENSUS RECESS AND WVWA LOGO OR APPROVED EQUAL. METER BOX SHALL NOT BE PLACED IN AREAS SUBJECT TO VEHICULAR TRAFFIC. IF TRAFFIC BEARING BOX IS REQUIRED, DESIGN ENGINEER SHALL CONSULT WITH PARTICIPATING UTILITY TO DETERMINE SITE SPECIFIC REQUIREMENTS.
5. SERVICE SHALL BE "K" TYPE COPPER, OR COPPER TUBE SIZE POLYETHYLENE (PE) 4710, SODR-9 (200 psi).
6. PRESSURE REDUCING VALVE WITH INTEGRAL PRESSURE RELIEF VALVE SHALL BE WILKINS NR3XLEC OR APPROVED EQUAL. TO BE SUPPLIED AND INSTALLED BY CONTRACTOR UPSTREAM OF METER.
7. THIS CONFIGURATION IS REQUIRED WHEN THE WATER PRESSURE AT THE WATER MAIN EXCEEDS 120 PSI.
8. WHENEVER SIDEWALK EXISTS OR IS PROPOSED, MODIFY METER LOCATION AS DIRECTED.

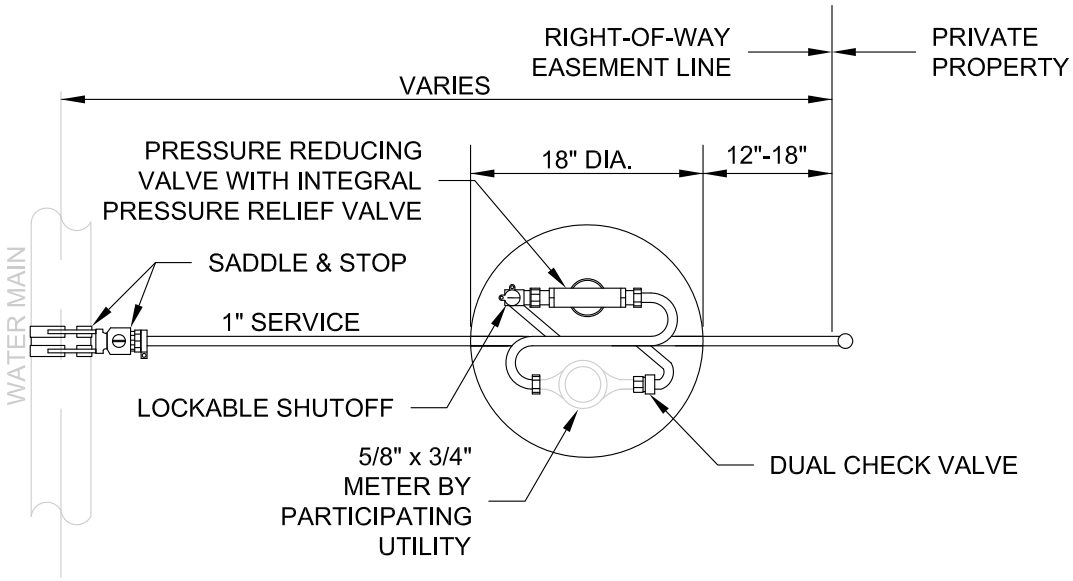

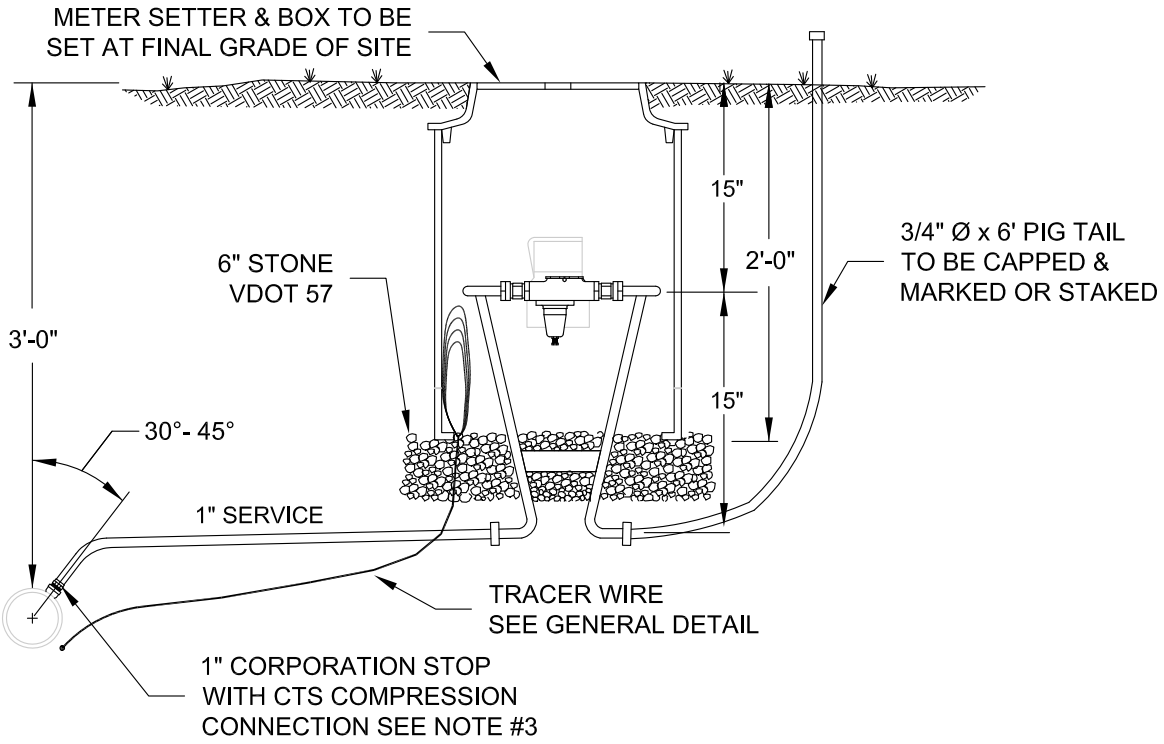

WESTERN VIRGINIA REGIONAL - CONSTRUCTION DETAIL

SINGLE RESIDENTIAL
WATER SERVICE FOR HIGH PRESSURE
(LINE PRESSURE OVER 120 PSI)

09/07/17

W-3

1. SETTER TO BE A.Y. McDONALD 720-215 WDDD33, FORD VBHH72-15W-11-33 OR APPROVED EQUAL.
2. SADDLES MUST BE USED WITH ALL PLASTIC DUCTILE IRON PIPE. SERVICE SADDLES SHALL BE USED IN ACCORDANCE WITH WATER DISTRIBUTION PIPING SPECIFICATION. SERVICE SADDLES FOR PLASTIC PIPE SHALL BE POWERSEAL 3417, OR 3412AS, ROMAC 202S, OR 306, OR FORD METER FS202 OR FS303. FOR DUCTILE IRON PIPE USE THE ABOVE OR POWERSEAL 3413, ROMAC 202 OR FORD METER F202.
3. METER BOX SHALL BE CARSON/MID-STATES PLASTICS, INC. PLASTIC BOX WITH FORD "A" DOMESTIC SERIES FRAME WITH A NICOR DOMESTIC 12.25 CX LID WITH SENSUS RECESS AND WVWA LOGO, ADS CORRUGATED HDPE BOX WITH FORD "A" DOMESTIC SERIES FRAME WITH A NICOR DOMESTIC 12.25 CX LID WITH SENSUS RECESS AND WVWA LOGO OR APPROVED EQUAL. METER BOX SHALL NOT BE PLACED IN AREAS SUBJECT TO VEHICULAR TRAFFIC. IF TRAFFIC BEARING BOX IS REQUIRED, DESIGN ENGINEER SHALL CONSULT WITH PARTICIPATING UTILITY TO DETERMINE SITE SPECIFIC REQUIREMENTS.
4. WHENEVER SIDEWALK EXISTS OR IS PROPOSED, MODIFY METER LOCATION AS DIRECTED.
5. CORPORATION STOP SHALL BE FORD FB1000-4-G-NL, MUELLER B-25008 OR APPROVED EQUAL.
6. SERVICE SHALL BE "K" TYPE COPPER, OR COPPER TUBE SIZE POLYETHYLENE (PE) 4710, SODR-9 (200 psi).

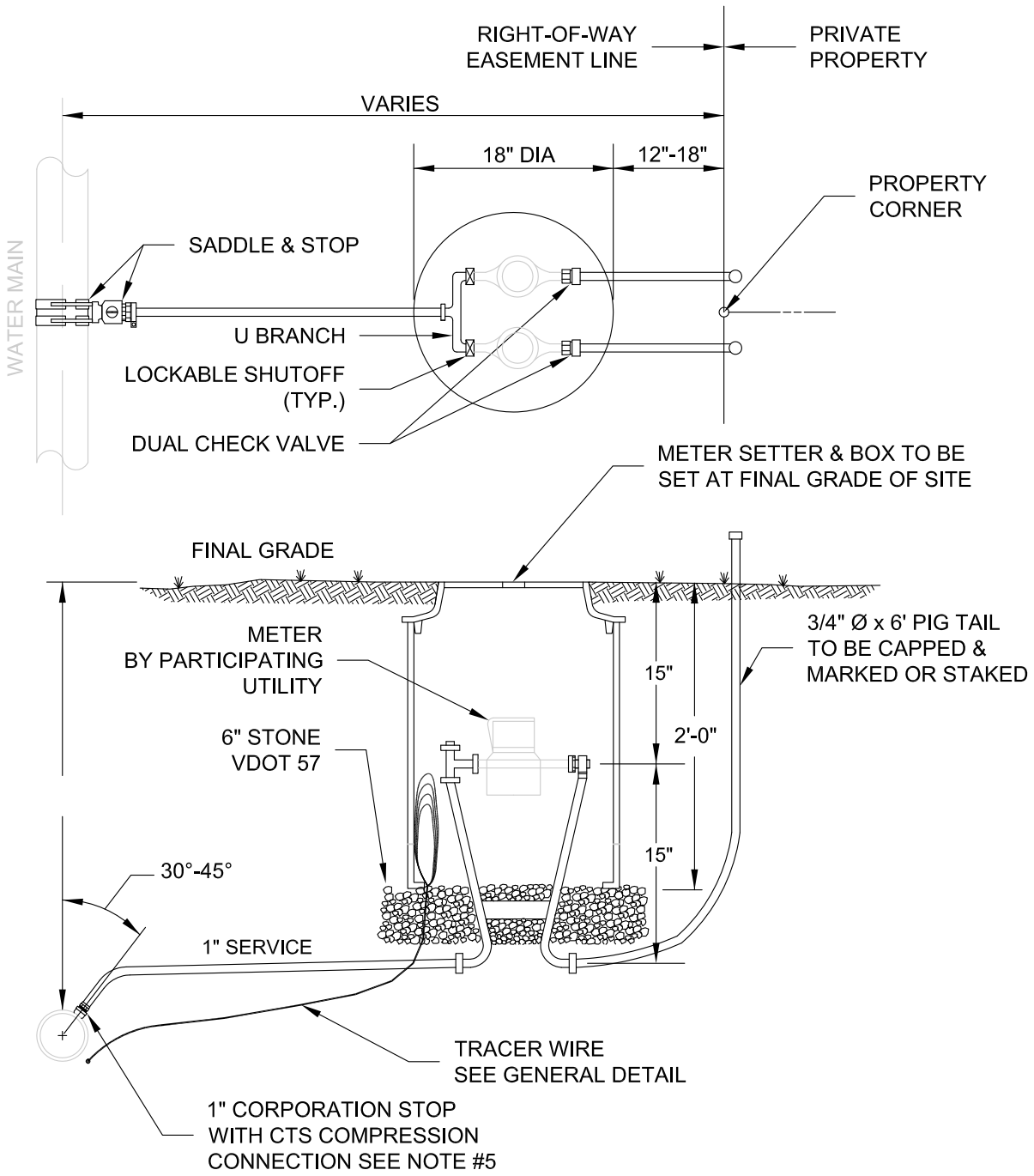

WESTERN VIRGINIA REGIONAL - CONSTRUCTION DETAIL

DOUBLE RESIDENTIAL
WATER SERVICE
(LINE PRESSURE UNDER120 PSI)

09/07/17

W-4

1. SETTER TO BE A.Y. McDONALD 720-215 WXDD33, FORD VB72-15W-11-33 OR APPROVED EQUAL.
2. SADDLES MUST BE USED WITH ALL PLASTIC DUCTILE IRON PIPE. SERVICE SADDLES SHALL BE USED IN ACCORDANCE WITH WATER DISTRIBUTION PIPING SPECIFICATION. SERVICE SADDLES FOR PLASTIC PIPE SHALL BE POWERSEAL 3417, OR 3412AS, ROMAC 202S, OR 306, OR FORD METER FS202 OR FS303. FOR DUCTILE IRON PIPE USE THE ABOVE OR POWERSEAL 3413, ROMAC 202 OR FORD METER F202.
3. METER BOX SHALL BE CARSON/MID-STATES PLASTICS, INC. PLASTIC BOX WITH FORD "A" DOMESTIC SERIES FRAME WITH A NICOR DOMESTIC 12.25 CX LID WITH SENSUS RECESS AND WVWA LOGO, ADS CORRUGATED HDPE BOX WITH FORD "A" DOMESTIC SERIES FRAME WITH A NICOR DOMESTIC 12.25 CX LID WITH SENSUS RECESS AND WVWA LOGO OR APPROVED EQUAL. METER BOX SHALL NOT BE PLACED IN AREAS SUBJECT TO VEHICULAR TRAFFIC. IF TRAFFIC BEARING BOX IS REQUIRED, DESIGN ENGINEER SHALL CONSULT WITH PARTICIPATING UTILITY TO DETERMINE SITE SPECIFIC REQUIREMENTS.
4. WHENEVER SIDEWALK EXISTS OR IS PROPOSED, MODIFY METER LOCATION AS DIRECTED.
5. CORPORATION STOP SHALL BE FORD FB1000-4-G-NL, MUELLER B-25008 OR APPROVED EQUAL.
6. SERVICE SHALL BE "K" TYPE COPPER, OR COPPER TUBE SIZE POLYETHYLENE (PE) 4710, SODR-9 (200 psi).

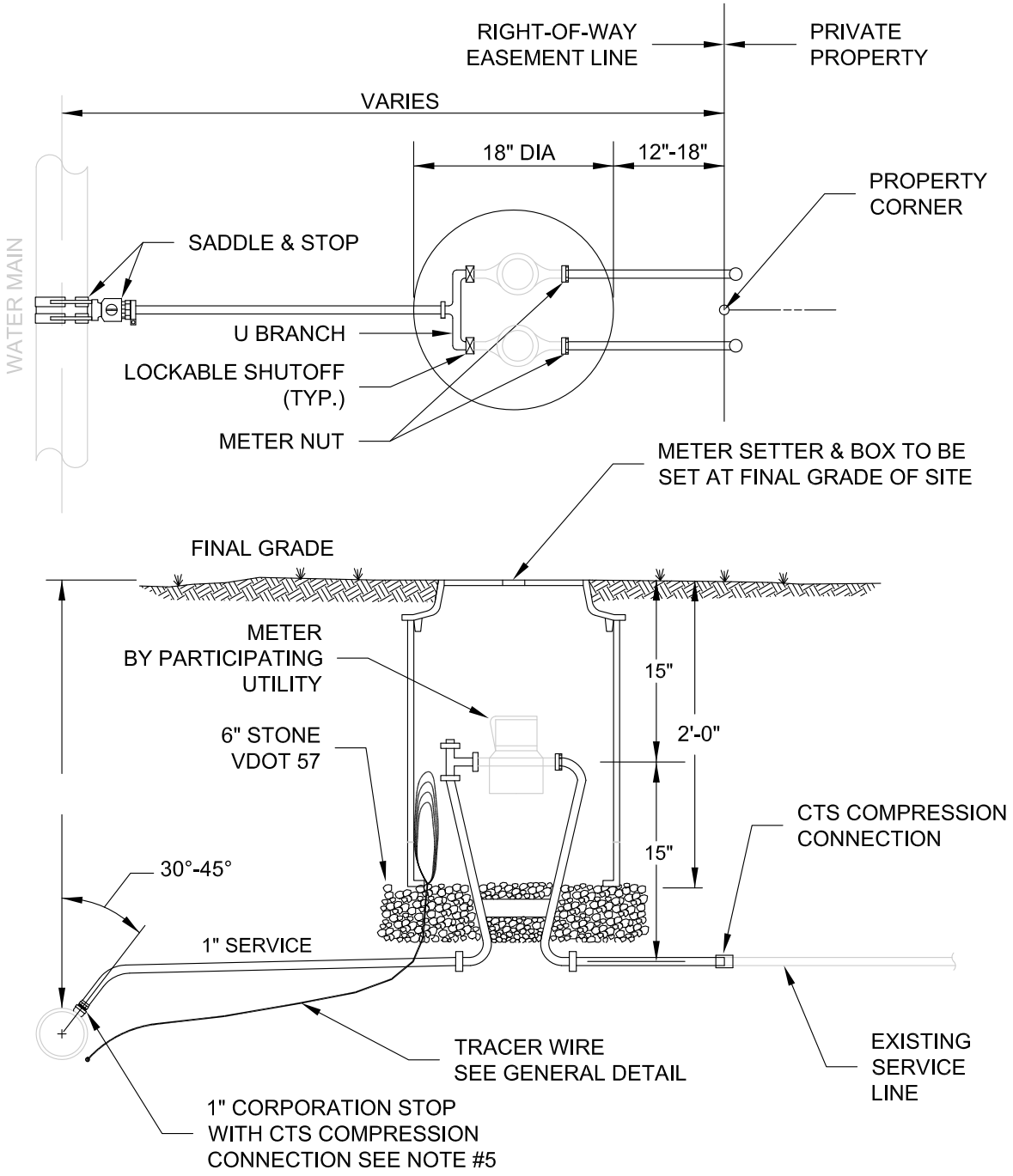

WESTERN VIRGINIA REGIONAL - CONSTRUCTION DETAIL

DOUBLE RESIDENTIAL
WATER SERVICE
(REPLACEMENT OF EXISTING SERVICE)

09/07/17

W-4E

1. ALL METERS ARE TO BE PROVIDED AND INSTALLED BY PARTICIPATING UTILITY AT OWNER/DEVELOPER'S EXPENSE. METER BOX, SERVICE, AND SETTER TO BE FURNISHED AND INSTALLED BY OWNER/DEVELOPER IN ACCORDANCE WITH THE MINIMUM REQUIREMENTS SHOWN BELOW.
2. SADDLES MUST BE USED WITH ALL PLASTIC & DUCTILE IRON PIPE. SERVICE SADDLES SHALL BE USED IN ACCORDANCE WITH WATER DISTRIBUTION PIPING SPECIFICATION. SERVICE SADDLES FOR PLASTIC PIPE SHALL BE: POWERSEAL 3417, OR 3412AS, ROMAC 202S, OR 306, OR FORD METER FS202 OR FS303. FOR DUCTILE IRON PIPE USE THE ABOVE OR POWERSEAL 3413, ROMAC 202 OR FORD METER F202.
3. CORPORATION STOP SHALL BE FORD FB1000-4-G-NL, MUELLER B-25008 OR APPROVED EQUAL.
4. METER BOXES LOCATED IN AREAS SUBJECT TO VEHICULAR TRAFFIC SHALL BE CONCRETE WITH H-20 RATED TRAFFIC BEARING HATCH. ALL OTHER METER BOXES SHALL BE CARSON/MID-STATES PLASTICS, INC. PLASTIC BOX, ADS CORRUGATED HDPE BOX, OR APPROVED EQUAL. MINIMUM METER BOX & LID DIAMETERS SHALL BE IN ACCORDANCE WITH SIZING CHART BELOW.
5. SERVICE SHALL BE "K" TYPE COPPER OR P.E. 4710 ,CTS O.D., MINIMUM CELL CLASS 445474E AND 445474D.
6. COPPER METER SETTER TO BE FORD, A.Y. MCDONALD OR APPROVED EQUAL WITH ANGLE DUAL CHECK VALVE AND BYPASS HAVING LOCKABLE SHUTOFF VALVE.
7. SERVICES REQUIRING METERS LARGER THAN 2-INCH SHALL BE REVIEWED BY THE PARTICIPATING UTILITY ON A CASE BY CASE BASIS.

TRAFFIC BEARING LOCATION

TRAFFIC BEARING VAULT AND H-20 RATED HATCH SHALL BE SIZED IN ACCORDANCE WITH DIMENSIONAL REQUIREMENTS SHOWN BELOW.

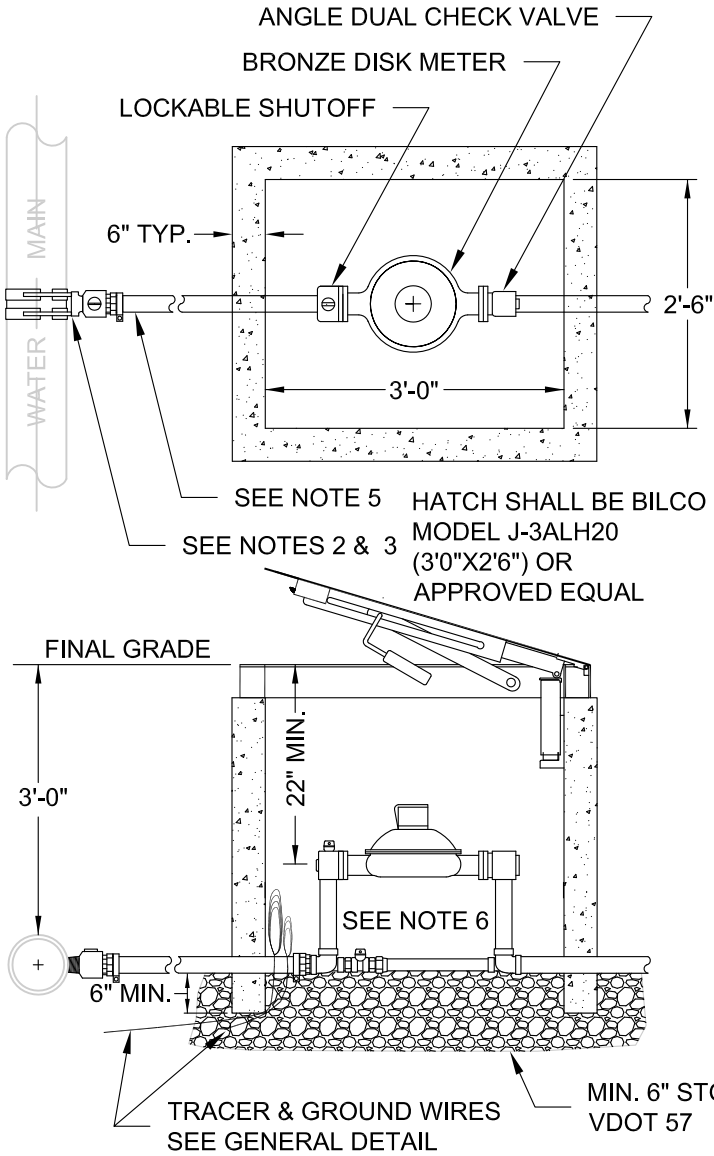

NON TRAFFIC BEARING LOCATION

SIZING CHART LID

METER SIZE	BOX DIA. (MIN.)	LID DIA. (MIN.)	COVER & LID MODEL (OR APPROVED EQUAL)
5/8"	18"	$11\frac{1}{2}$"	FORD "A" SERIES FRAME & NICOR DOMESTIC 12.25 CX LID WITH SENSUS RECESS AND WVWA LOGO
3/4"- 1"	24"	20"	FORD MC-24-T OR AY MCDONALD 74M24 T
1 1/2"-2"	30"	20"	FORD MC-30-T OR AY MCDONALD 74M30 T

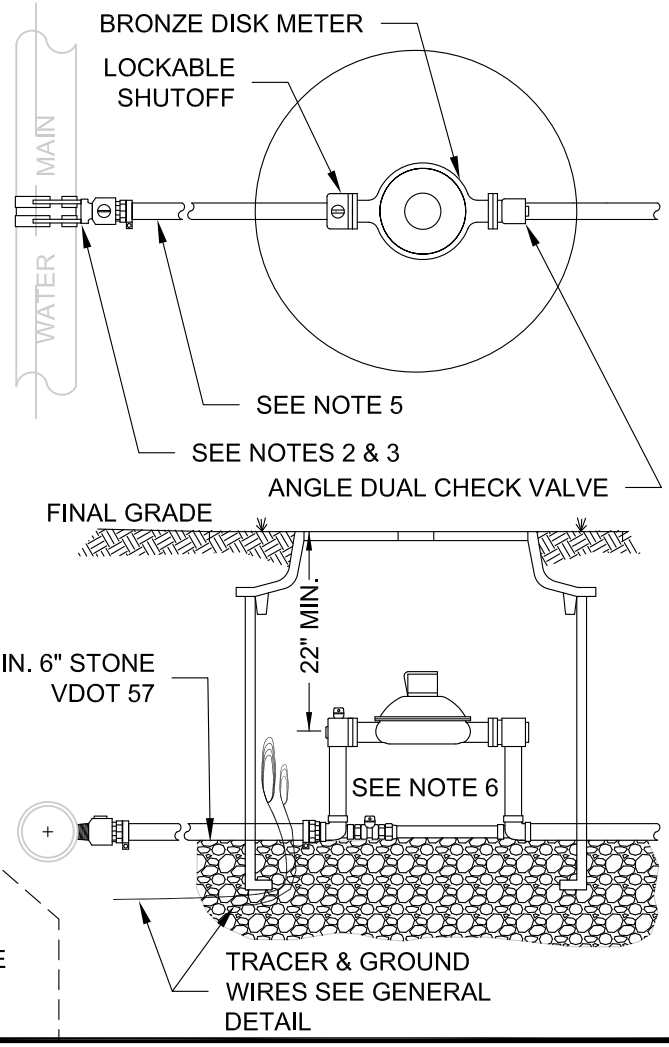

WESTERN VIRGINIA REGIONAL - CONSTRUCTION DETAIL

COMMERCIAL
WATER SERVICE
METER SIZES 5/8" - 2"

09/07/17

W-5

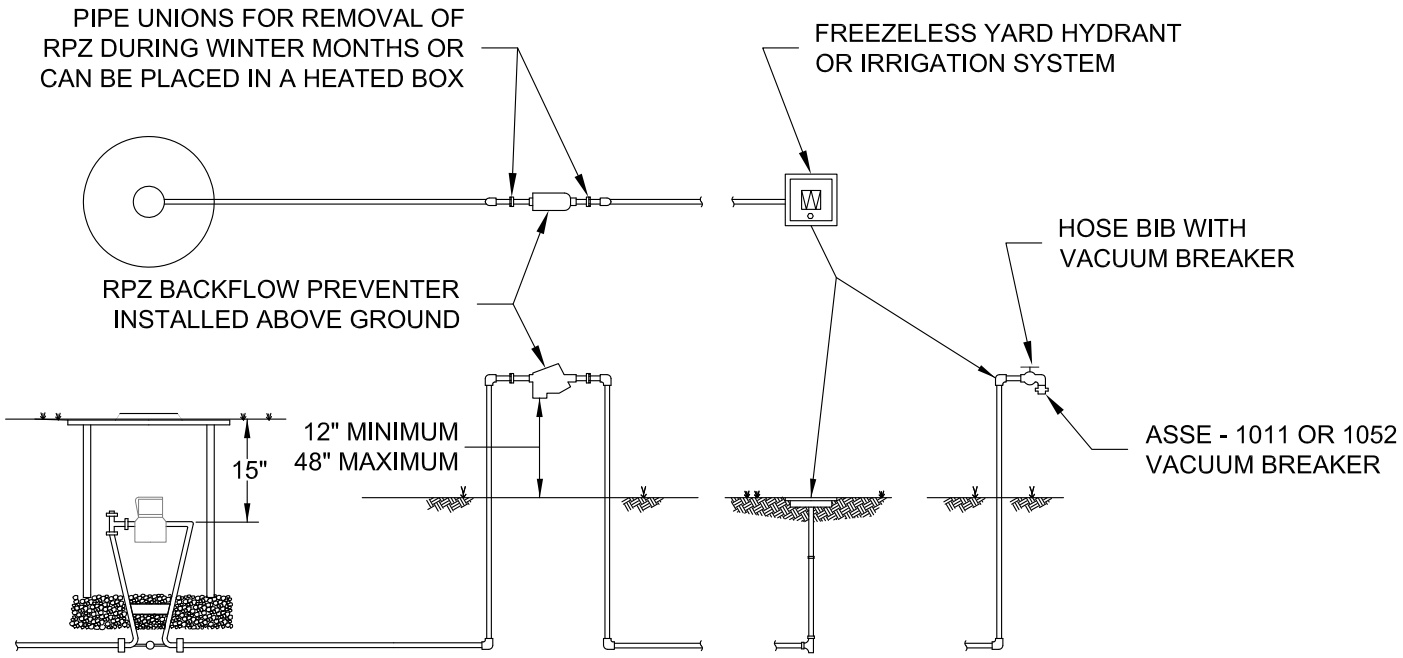

COMMERCIAL IRRIGATION LAYOUT

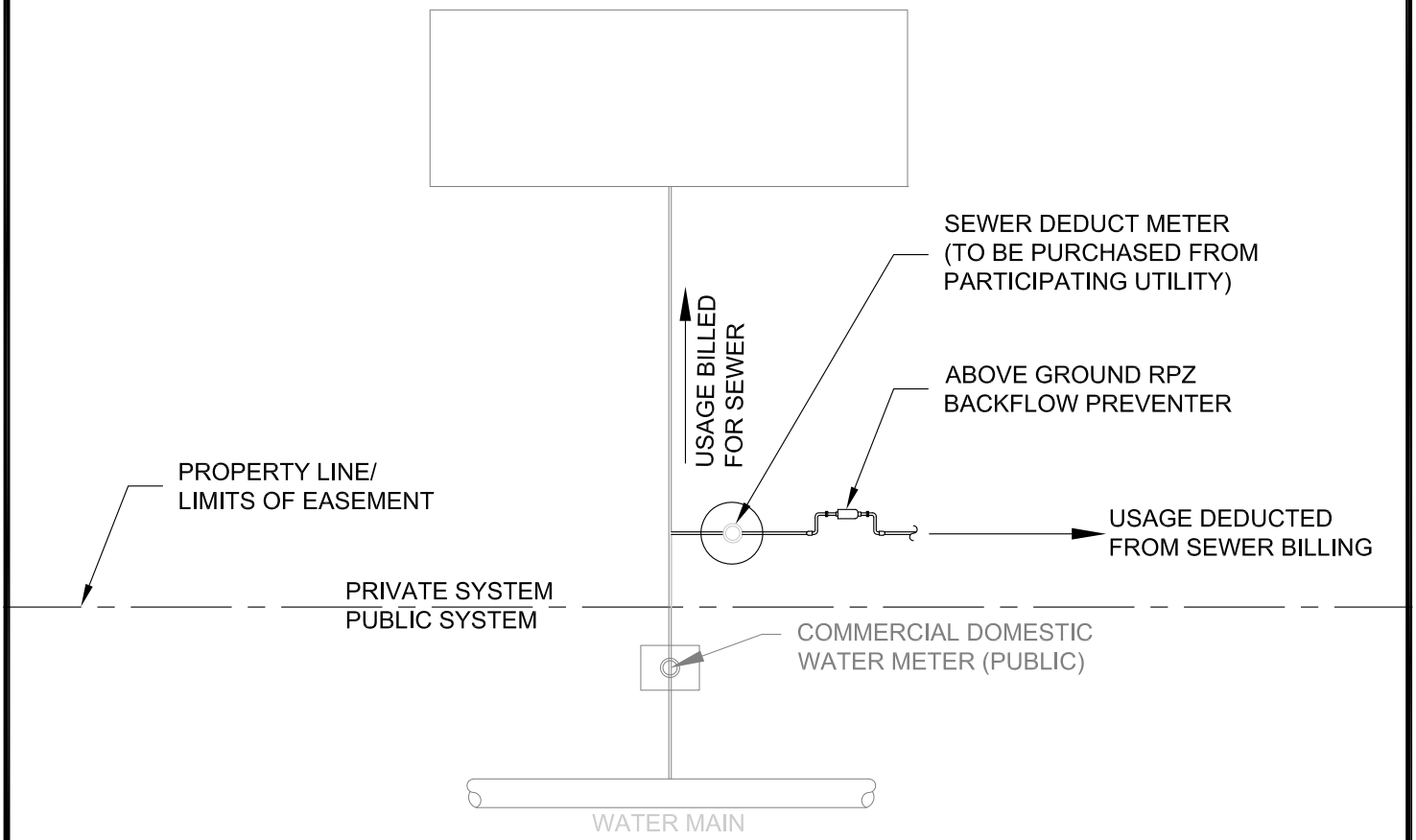

NOTES:

1. DEDUCT METERS SHALL BE INSTALLED AS CLOSE TO DOMESTIC METER AS REASONABLY POSSIBLE.
2. DEDUCT METERS ARE APPLICABLE TO:
   - COMMERCIAL IRRIGATION & HVAC CONDENSATION
   - INDUSTRIAL PROCESS WATER NOT ENTERING SEWER
3. METER LOCATIONS FOR HVAC AND INDUSTRIAL PROCESS WATER SHALL BE APPROVED BY THE PARTICIPATING UTILITY PRIOR TO INSTALLATION.

WESTERN VIRGINIA REGIONAL - CONSTRUCTION DETAIL

COMMERCIAL SEWER DEDUCTION METER INSTALLATION

W-6

01/01/14

1. FOR 6" FIRE LINE, EXTERIOR VAULT DIMENSIONS SHALL BE (L x W x H) 6' X 6' X 5' WITH DOMESTIC TAP MADE INSIDE VAULT AS SHOWN BELOW.
2. FOR 8" FIRE LINE EXTERIOR VAULT DIMENSIONS SHALL BE (L X W X H) 6' X 6' X 6' WITH DOMESTIC TAP MADE OUTSIDE VAULT. BALL VALVE WITH LOCKING TABS SHALL BE PROVIDED INSIDE VAULT TO ALLOW FOR ISOLATION OF DOMESTIC METER.
3. SINGLE DETECTOR CHECK VALVE SHALL BE WILKINS 310 DALM , WATTS ES-SS07F - BP, OR APPROVED EQUAL WITH FLANGED END CONNECTIONS, BYPASS ASSEMBLY, AND ONE OS&Y GATE VALVE.
4. BYPASS ASSEMBLY SHALL INCLUDE 2 BALL VALVES TO ISOLATE METER.
5. DOMESTIC SHALL BE TYPE K COPPER WITH GRIP JOINT FITTINGS, BALL VALVE AT TAPPING SADDLE (WITH LOCKING TABS) AND CHECK VALVE ON OUTLET.
6. DOMESTIC METER AND BYPASS METER TO BE SUPPLIED BY OWNER AND INSTALLED BY VENDOR.
7. "UNI FLANGE" ADAPTOR FLANGE, OR APPROVED EQUAL, OR FLANGED - PLAIN END PIPING REQUIRED FOR INLET AND OUTLET PIPING.
8. VAULT TO BE INSTALLED ON MIN. 6" COMPACTED VDOT #57 STONE WITH FILTER FABRIC PLACED BETWEEN BOTTOM OF VAULT AND STONE BEDDING. FILTER FABRIC TO EXTEND VERTICALLY A MINIMUM OF 6" ON ALL FOUR SIDES OF VAULT.

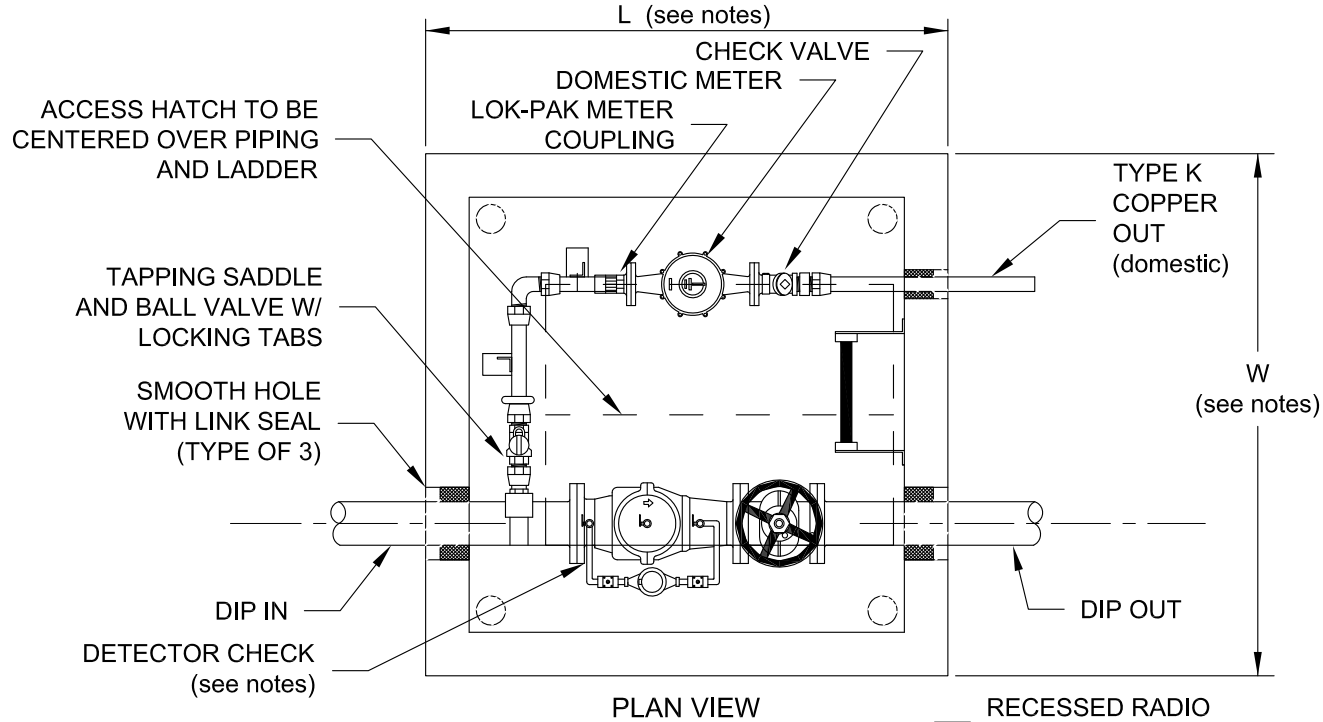

PLAN VIEW

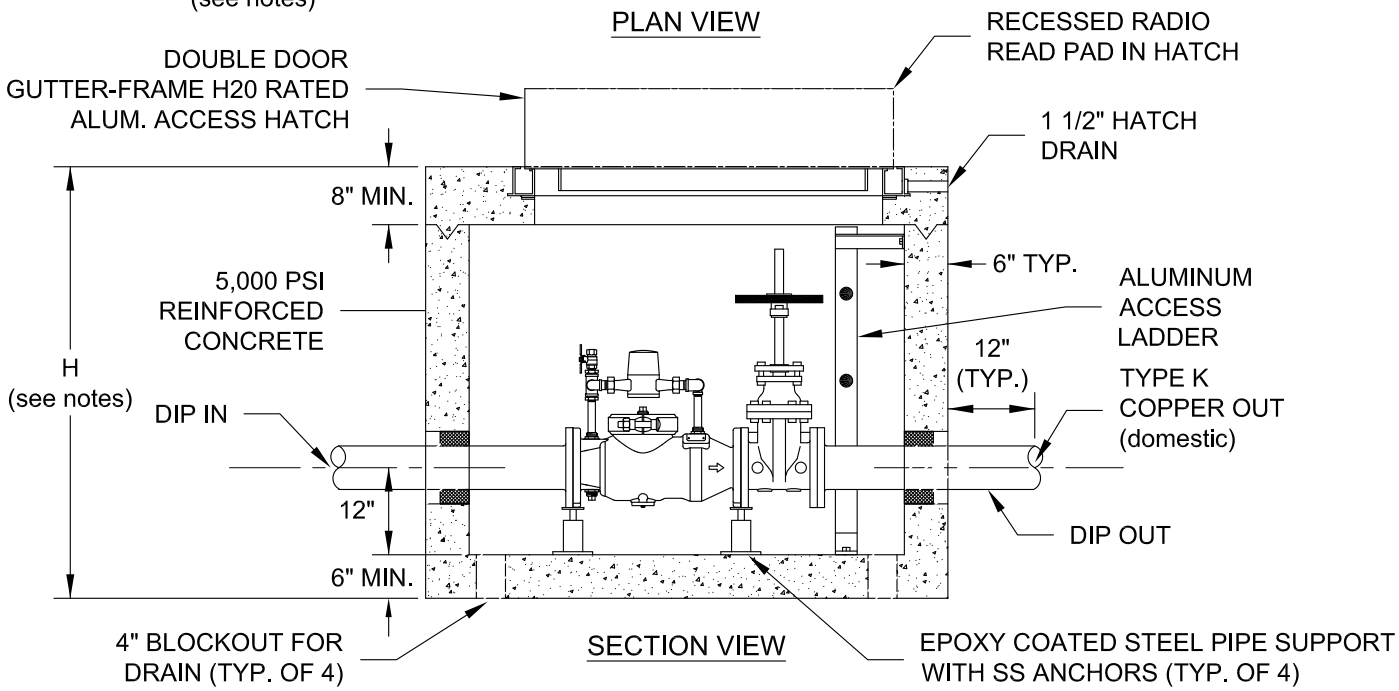

SECTION VIEW

WESTERN VIRGINIA REGIONAL - CONSTRUCTION DETAIL

COMMERCIAL METER VAULT

W-7

09/07/17

1. SINGLE DETECTOR CHECK VALVE SHALL BE WILKINS MODEL 310 DALM, WATTS ES-SS07F-BP, OR APPROVED EQUAL WITH FLANGED END CONNECTIONS AND BYPASS ASSEMBLY.
2. BYPASS ASSEMBLY SHALL INCLUDE 2 BALL VALVES TO ISOLATE METER.
3. BYPASS METER TO BE SUPPLIED BY OWNER AND INSTALLED BY VENDOR.
4. MANHOLE SECTIONS MUST MEET ASTM C478, AASHTO M-199 REQUIREMENTS.
5. "UNI FLANGE" ADAPTOR FLANGE, OR APPROVED EQUAL, OR FLANGED - PLAIN END PIPING REQUIRED FOR INLET AND OUTLET PIPING
6. 3/4" THREADED ROD TO BE EMBEDDED A MINIMUM OF 4" INTO CONCRETE AND TO BE FIRMLY SECURED WITH EPOXY.

SERVICE LINE DIAMETER	HOLE I.D.
4"	8"
6"	10"
8"	12"

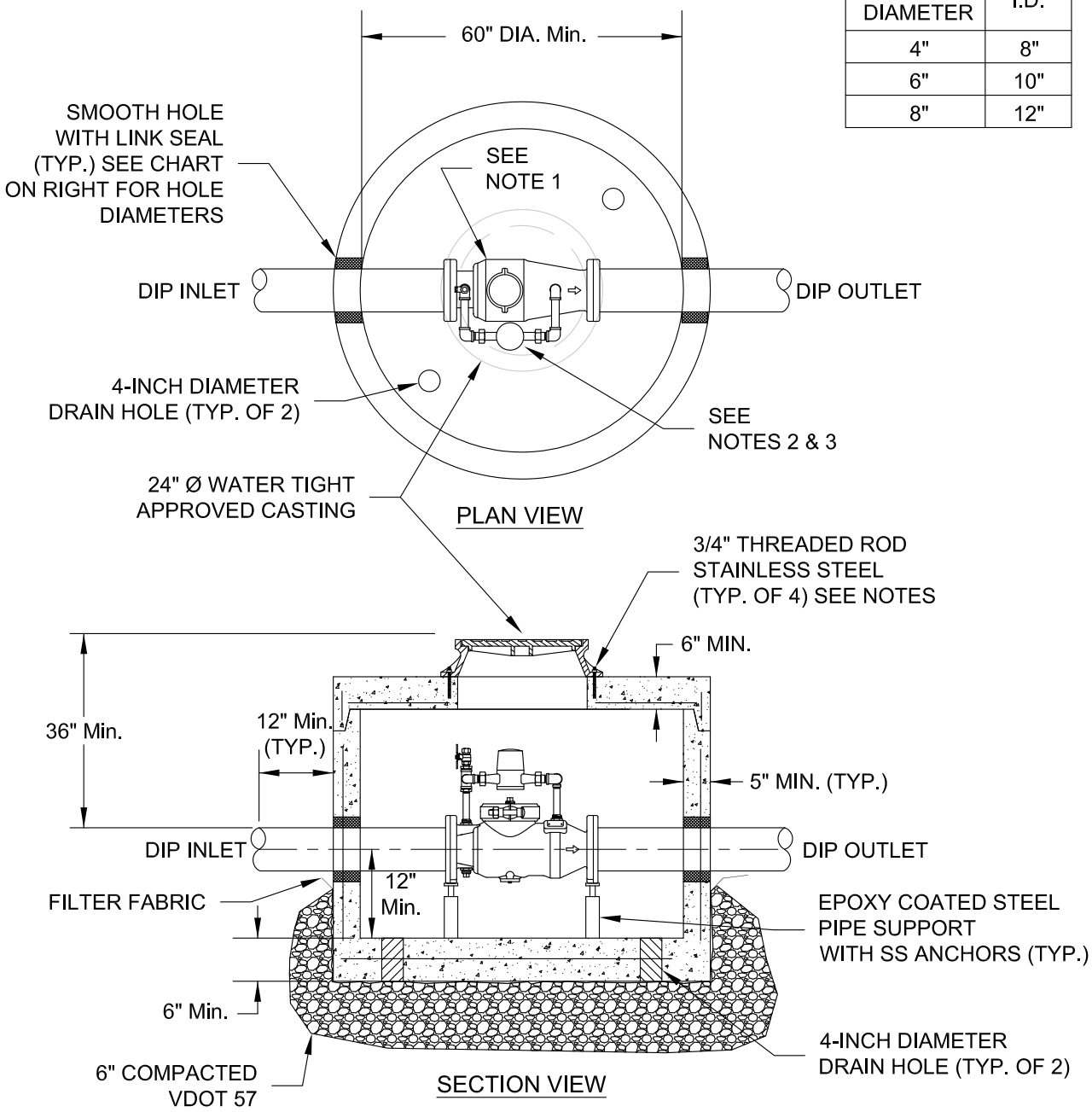

WESTERN VIRGINIA REGIONAL - CONSTRUCTION DETAIL

FIRE SERVICE VAULT FOR PRIVATE HYDRANT

W-8

02/10/15

1. FILTER FABRIC TO BE INSTALLED BETWEEN BOTTOM OF PIPE AND STONE BEDDING. FABRIC TO EXTEND VERTICALLY A MINIMUM OF 6" FROM BOTTOM OF VAULT (FULL CIRCUMFERENCE).

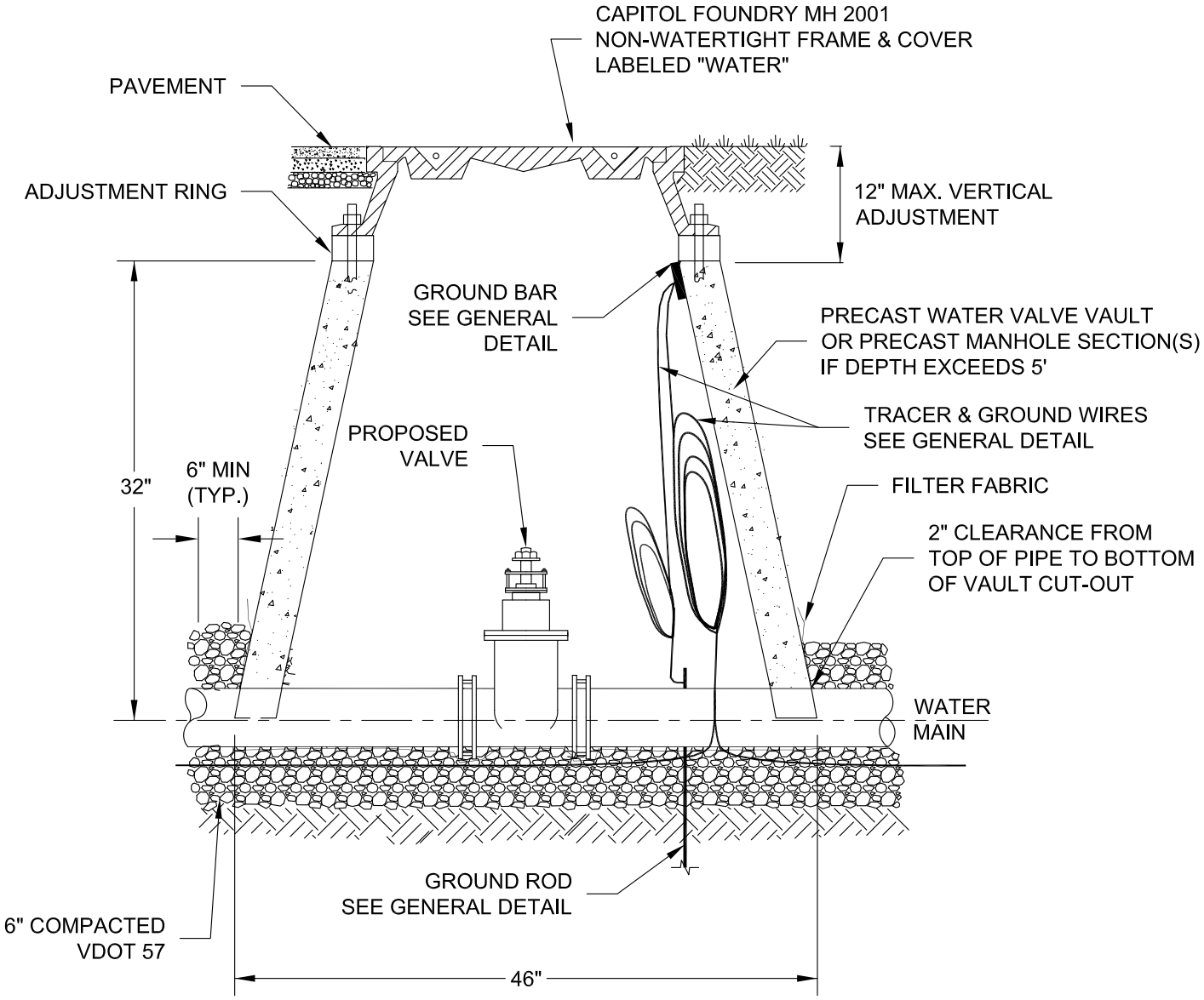

WESTERN VIRGINIA REGIONAL - CONSTRUCTION DETAIL

WATER LINE VALVE
& VAULT

W-9

01/01/14

1. WHEN APPROVED BY PARTICIPATING UTILITY, FIRE HYDRANT ASSEMBLIES MAY BE USED AS PERMANENT END OF LINES.
2. DETAIL FOR UP TO 8" MAINS, LARGER LINES SEE WATER SYSTEM DESIGN STANDARDS FOR MIN. FLUSHING VALVE REQUIREMENTS.
3. THE END OF A PIPELINE SHALL NOT TERMINATE IN A PAVED AREA OR UNDER A CONCRETE CURB & GUTTER.
4. THE PIPING AND "STREET ELS" BETWEEN THE MAIN LINE AND 2" GATE VALVE SHALL BE LEAD FREE BRASS OR DUCTILE IRON.
5. RESTRAINED JOINTS SHALL BE INSTALLED BEFORE MJ PLUG FOR DISTANCE SHOWN IN THE "MINIMUM THRUST RESTRAINT OF PIPE JOINTS DESIGN LENGTHS" DETAIL FOR VALVE/PLUG AND CORRESPONDING PLUG DIAMETER.

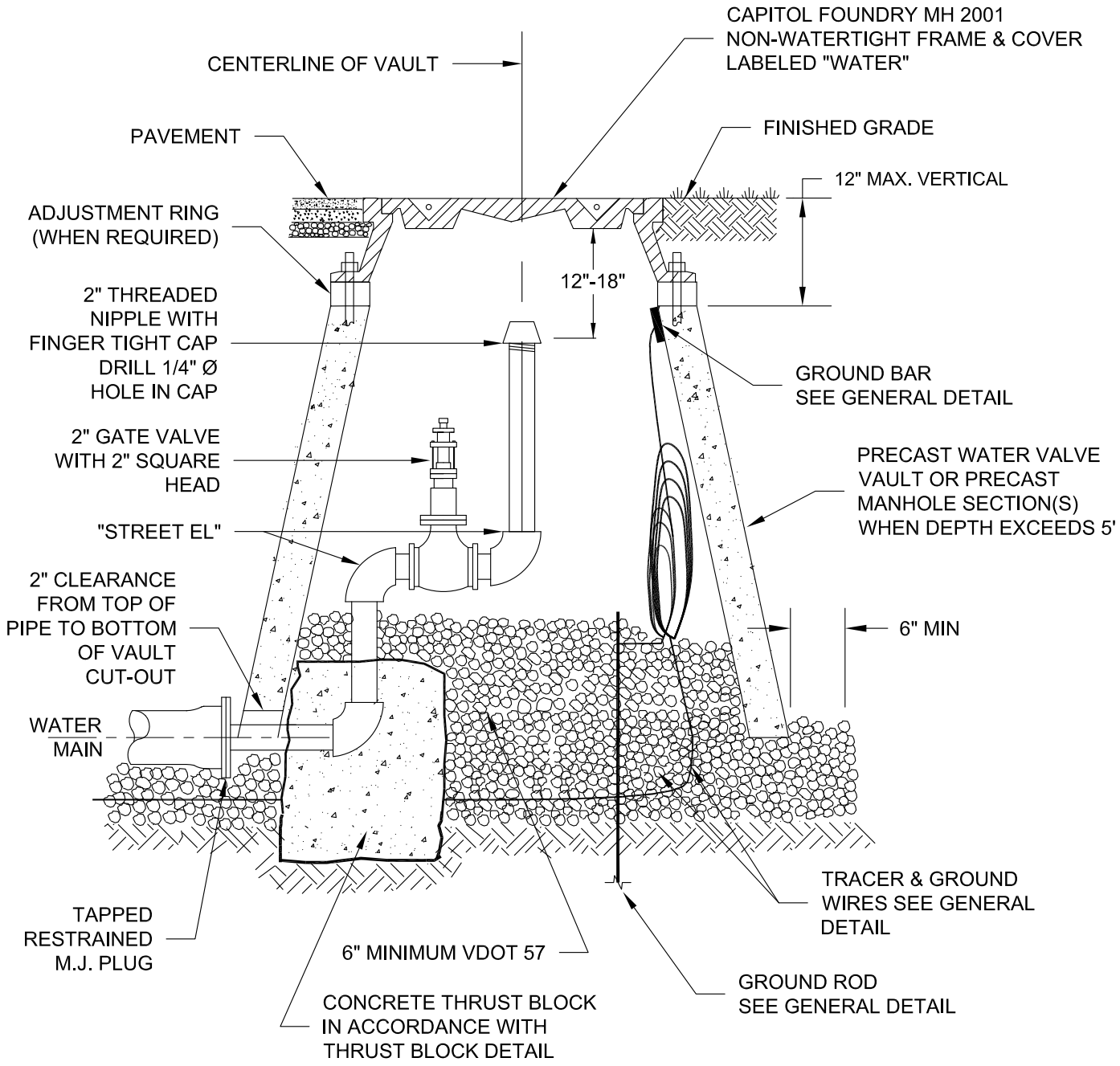

WESTERN VIRGINIA REGIONAL - CONSTRUCTION DETAIL

PERMANENT END
OF LINE BLOW-OFF ASSEMBLY

W-10

02/10/15

1. THE 2" PIPING AND "STREET EL" SHALL BE LEAD FREE BRASS OR DUCTILE IRON.
2. PIPE JOINTS SHALL BE RESTRAINED BEFORE GATE VALVE IN ACCORDANCE WITH DISTANCE SHOWN IN THE "MINIMUM THRUST RESTRAINT OF PIPE JOINTS DESIGN LENGTHS" DETAIL FOR VALVE / PLUG. PIPE JOINTS BETWEEN GATE VALVE AND BLOWOFF SHALL ALSO BE RESTRAINED.

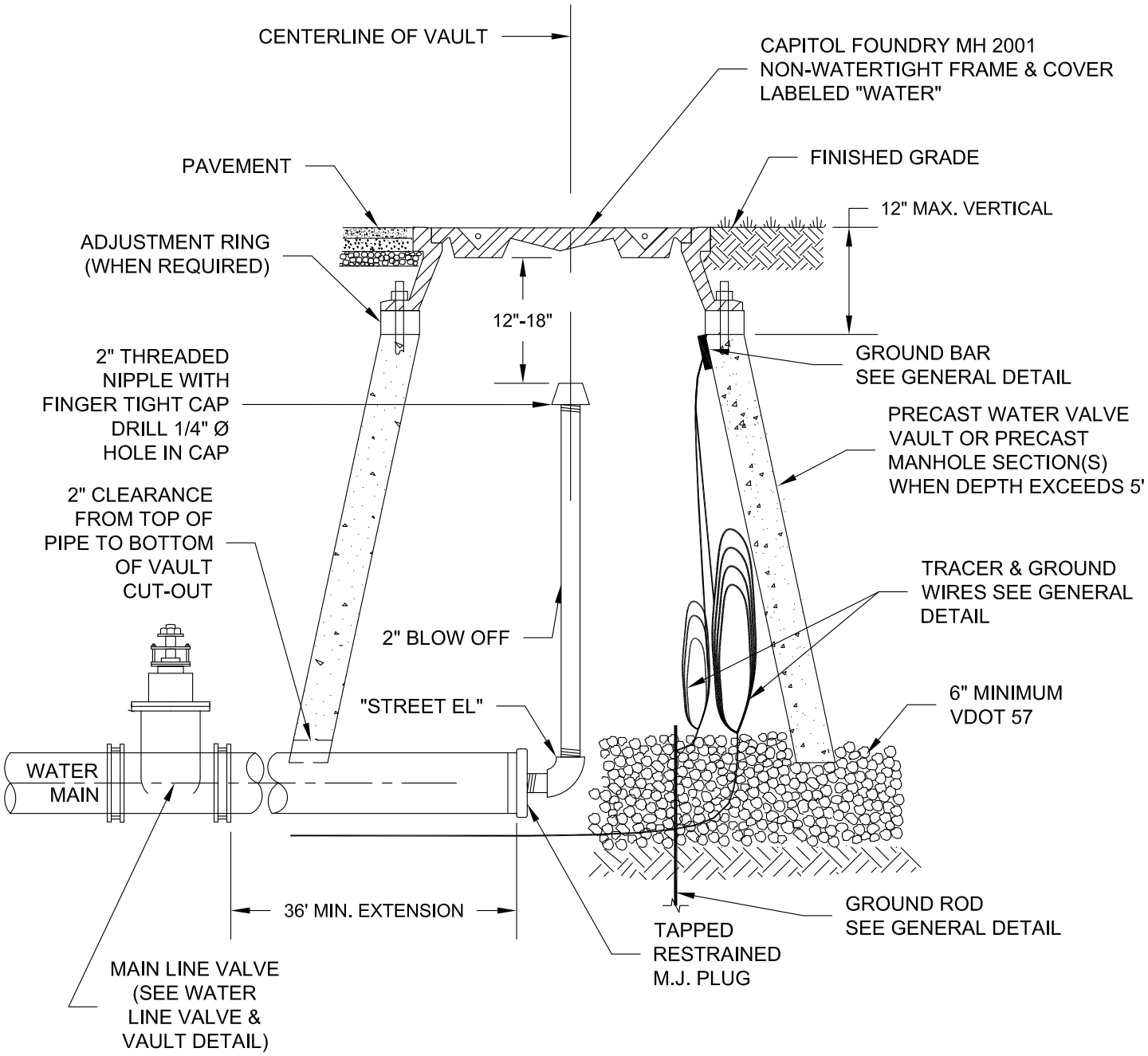

WESTERN VIRGINIA REGIONAL - CONSTRUCTION DETAIL

TEMPORARY END OF LINE
BLOW-OFF ASSEMBLY

01/01/14

W-11

1. FIRE HYDRANTS MAY BE USED AT LOW POINTS IN PLACE OF BLOW-OFFS.
2. THE PIPING AND "STREET ELS" BETWEEN CORPORATION STOP AND 2" GATE VALVE SHALL BE LEAD FREE BRASS OR DUCTILE IRON PIPE.
3. THE POINT OF CONNECTION TO THE WATER MAIN SHALL BE LOCATED NEAR THE BOTTOM OF THE MAIN (AS SHOWN) TO FACILITATE REMOVAL OF ACCUMULATED SEDIMENT.
4. SADDLES FOR PLASTIC PIPE SHALL BE PER RESIDENTIAL WATER SERVICE DETAIL.

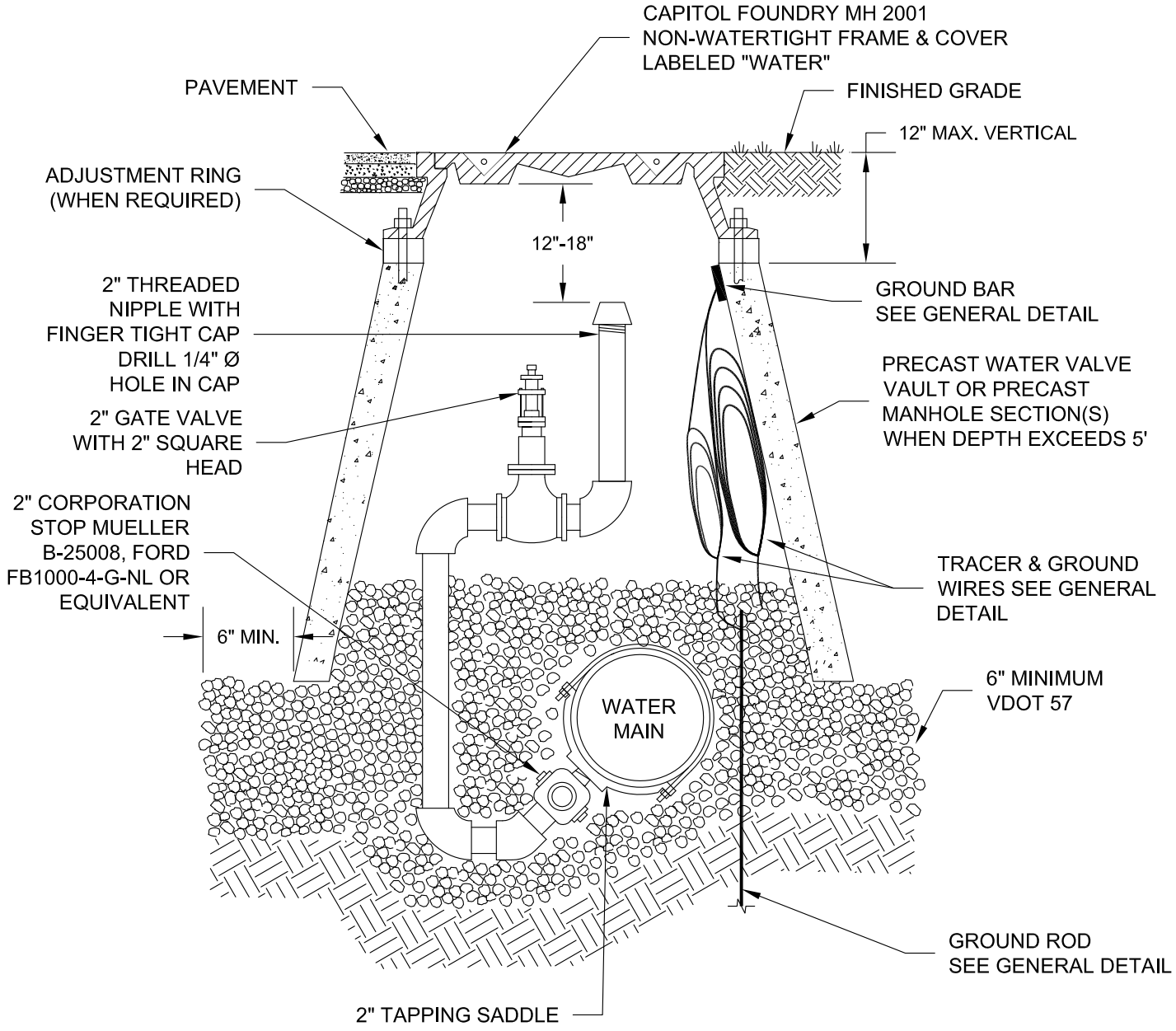

WESTERN VIRGINIA REGIONAL - CONSTRUCTION DETAIL

IN-LINE
BLOW-OFF ASSEMBLY

W-12

02/10/15

1. SEE RESIDENTIAL WATER SERVICE DETAIL FOR SADDLE REQUIREMENTS.
2. LARGER COMBINATION VALVE MAY BE REQUIRED DEPENDING ON APPLICATION.

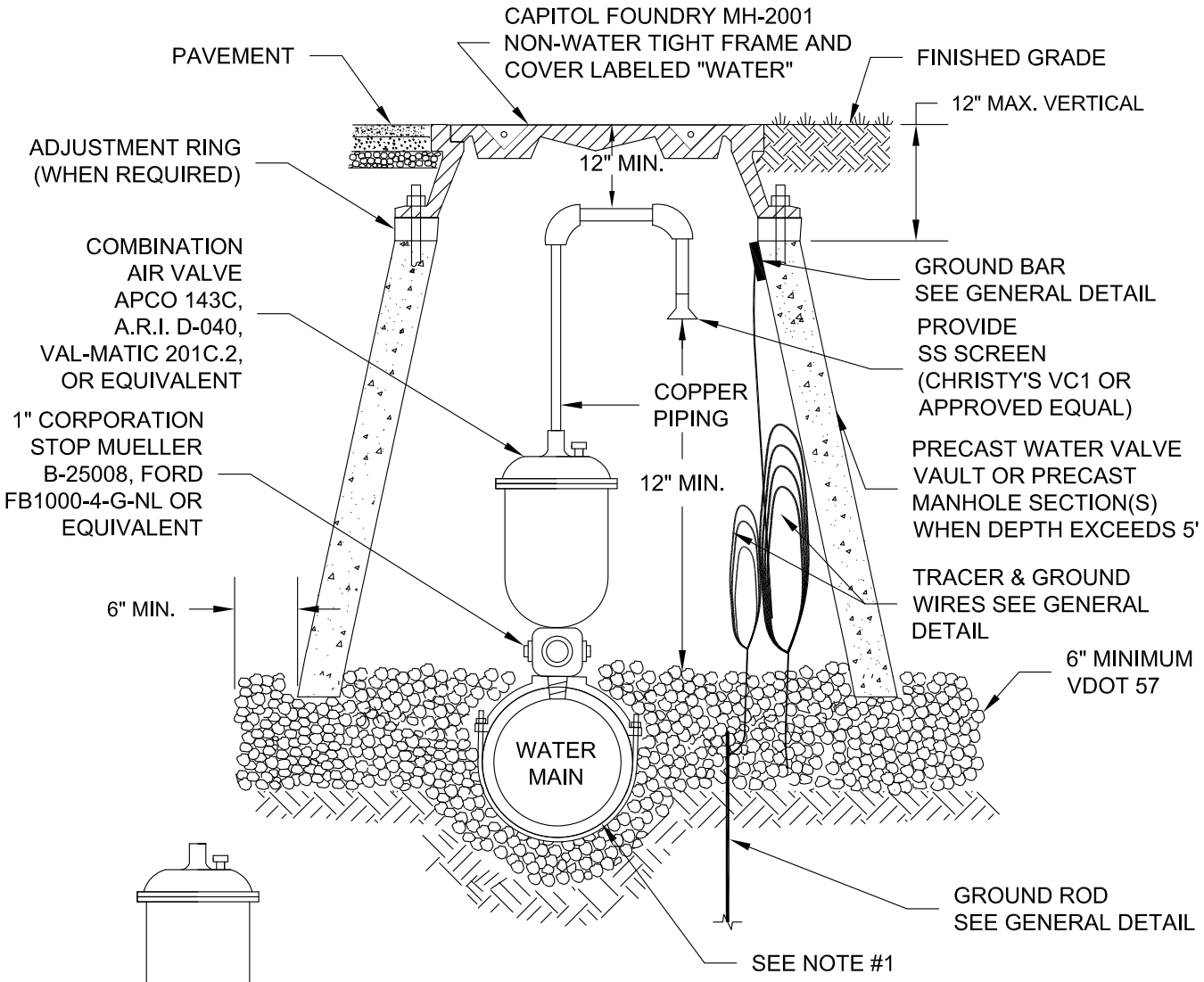

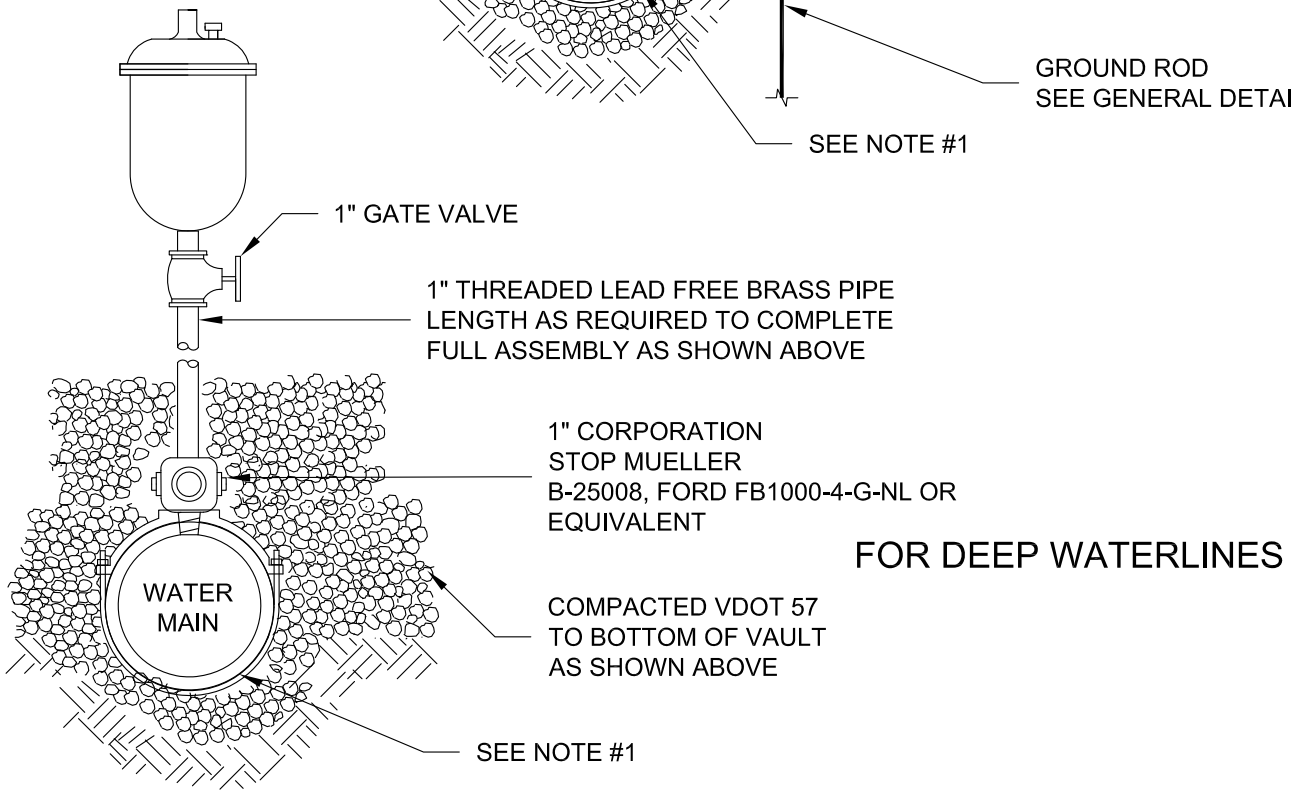

FOR DEEP WATERLINES

WESTERN VIRGINIA REGIONAL - CONSTRUCTION DETAIL

COMBINATION AIR VALVE ASSEMBLY

W-13

02/10/15

1. 2" CORPORATION STOP, MUELLER B-25008, FORD FB1000-4-G-NL OR EQUIVALENT.
2. LIQUID FILLED PRESSURE GAUGE.
3. 2" FLANGED PRESSURE REGULATING VALVE (CLA-VAL MODEL 90-01 OR APPROVED EQUAL) SET AT WORKING PRESSURE.
4. FLANGE x FLANGE MAIN LINE PRESSURE REGULATING VALVE (CLA-VAL MODEL 90-01 OR APPROVED EQUAL) SET AT 5 psi LESS THAN #3. (CLA-VAL 690-01 OR APPROVED EQUAL) MAY BE ALLOWED IN SOME INSTALLATIONS, CONFIRM WITH PARTICIPATING UTILITY.
5. FLANGE x FLANGE GATE VALVE, WITH HAND WHEEL. ONE SIZE LESS THAN MAIN LINE.
6. FLANGE x FLANGE PRESSURE RELIEF VALVE, ONE SIZE LESS THAN MAIN LINE (CLA-VAL MODEL 650-01 OR APPROVED EQUAL) SET AT 5 psi GREATER THAN #3.
7. VAULT SHALL BE PRE-CAST 5,000 PSI REINFORCED CONCRETE.
8. MAIN LINE (INLET, OUTLET, AND INTERIOR) PIPING SHALL BE FLANGED - PLAIN END, OR PLAIN END DUCTILE IRON PIPE WITH APPROVED FLANGE ADAPTER. MIN. PRESSURE CLASS 350 OR THICKNESS CLASS 50.
9. VAULT TO BE INSTALLED ON MIN. 6" COMPACTED VDOT #57 STONE WITH FILTER FABRIC PLACED BETWEEN BOTTOM OF VAULT AND STONE BEDDING. FILTER FABRIC TO EXTEND VERTICALLY A MINIMUM OF 6" ON ALL FOUR SIDES OF VAULT.

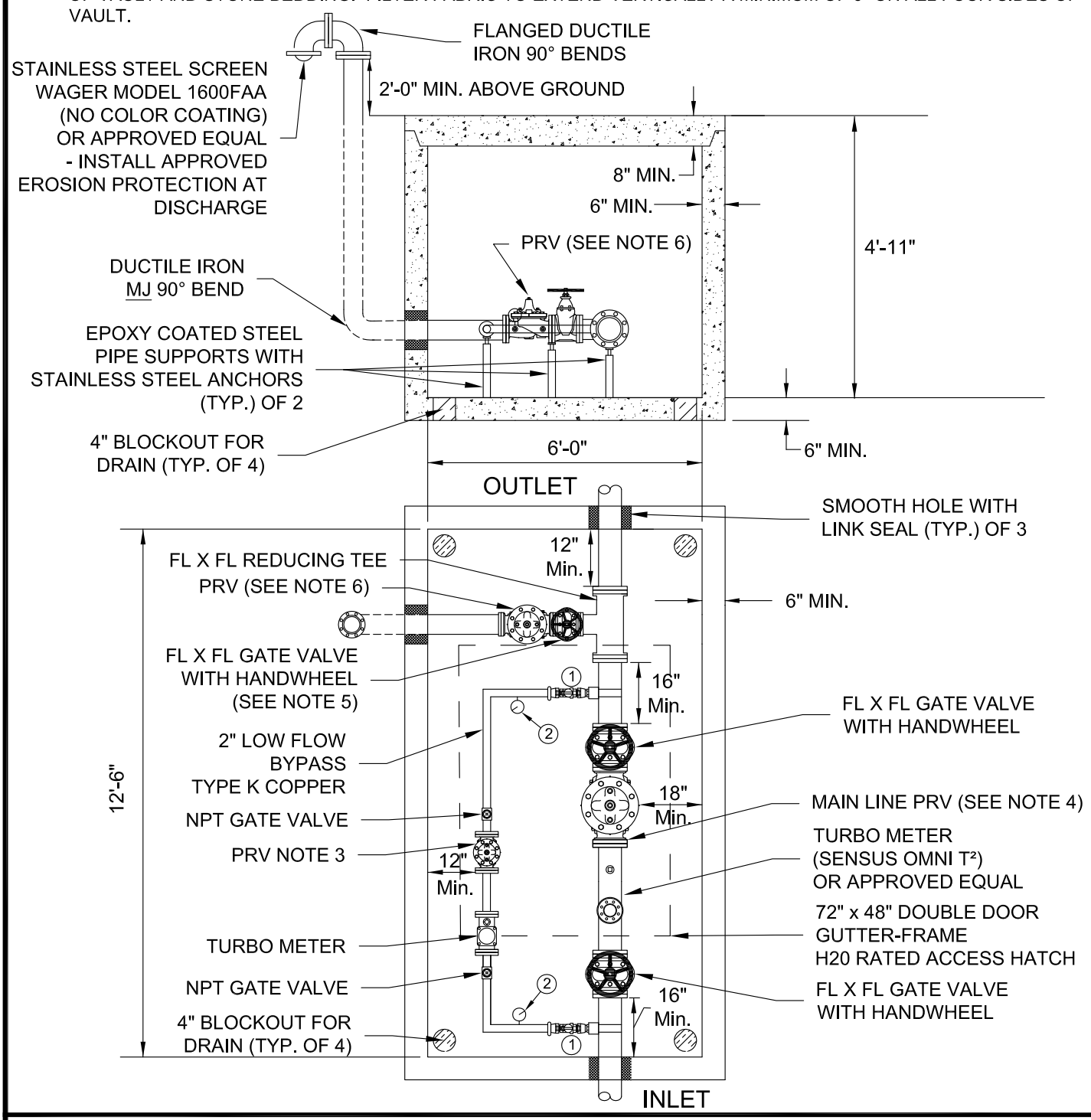

WESTERN VIRGINIA REGIONAL - CONSTRUCTION DETAIL

MAIN LINE - PRESSURE REDUCING VALVE ASSEMBLY

W-14

1/26/16

1. TO BE USED WHEN STANDARD VAULT CONSTRUCTION EXCEEDS MAXIMUM VERTICAL HEIGHT OF 5'.

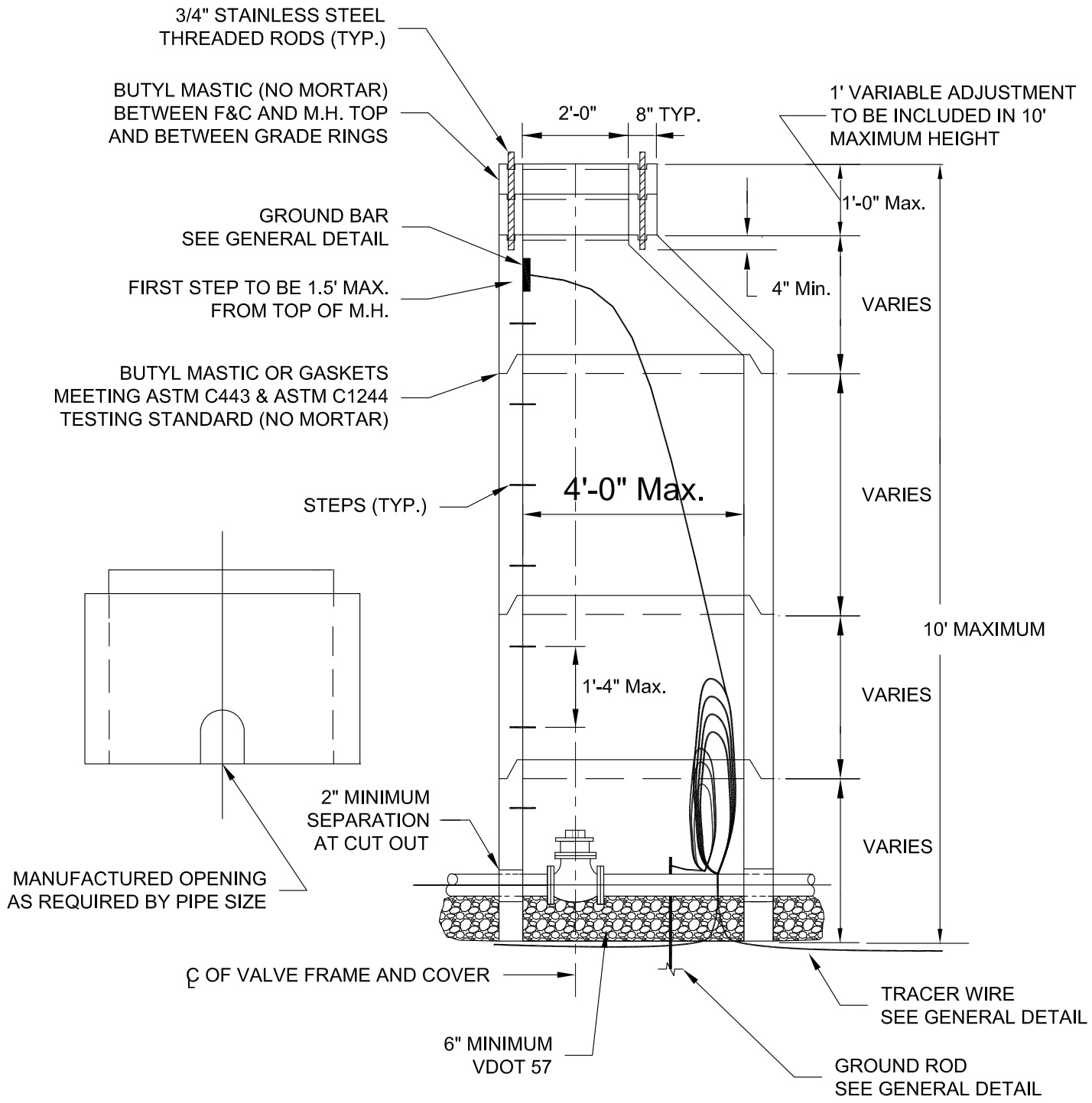

WESTERN VIRGINIA REGIONAL - CONSTRUCTION DETAIL

DEEP VALVE
VAULT (MANHOLE)

01/01/14

W-15

1. USE MODERATELY STIFF MIX OF NON SHRINK GROUT, SAND, AND 1/2" AND LESS DIAMETER GRAVEL WITH 28 DAYS, STRENGTH AT MINIMUM 3,000 P.S.I.
2. MIX IS TO BE FORCED INTO ALL GROOVES AND UNDER FLANGE OF FRAME AND LEFT AT OR ABOVE TOP OF FLANGE.
3. DO NOT BACKFILL AROUND FRAME AND COVER, FOR 48 HOURS AFTER CONCRETE IS PLACED. THE USE OF HIGH EARLY STRENGTH CEMENT WOULD REDUCE TIME TO (24 HRS.)
4. RESTRICT TRAFFIC LOAD FOR A MINIMUM OF 24 HOURS.

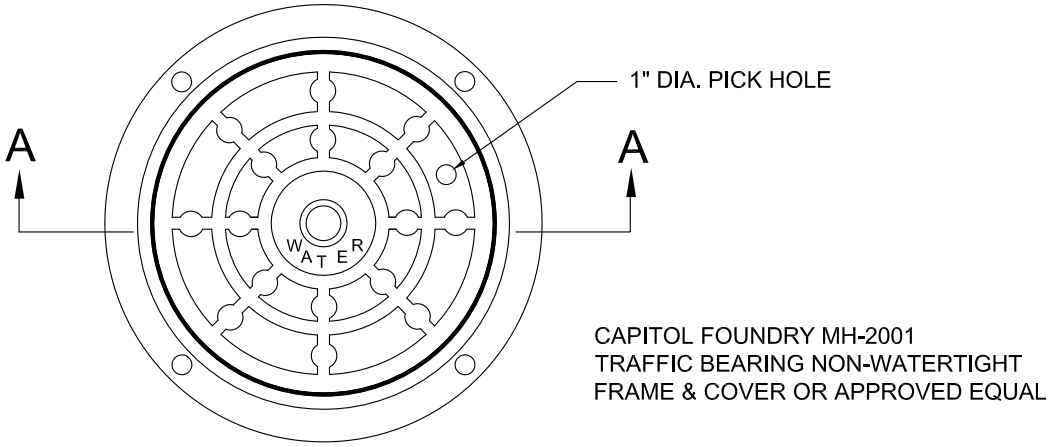

PLAN

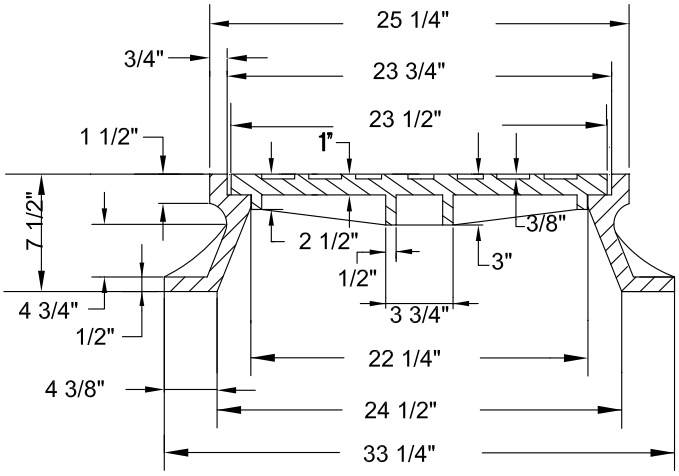

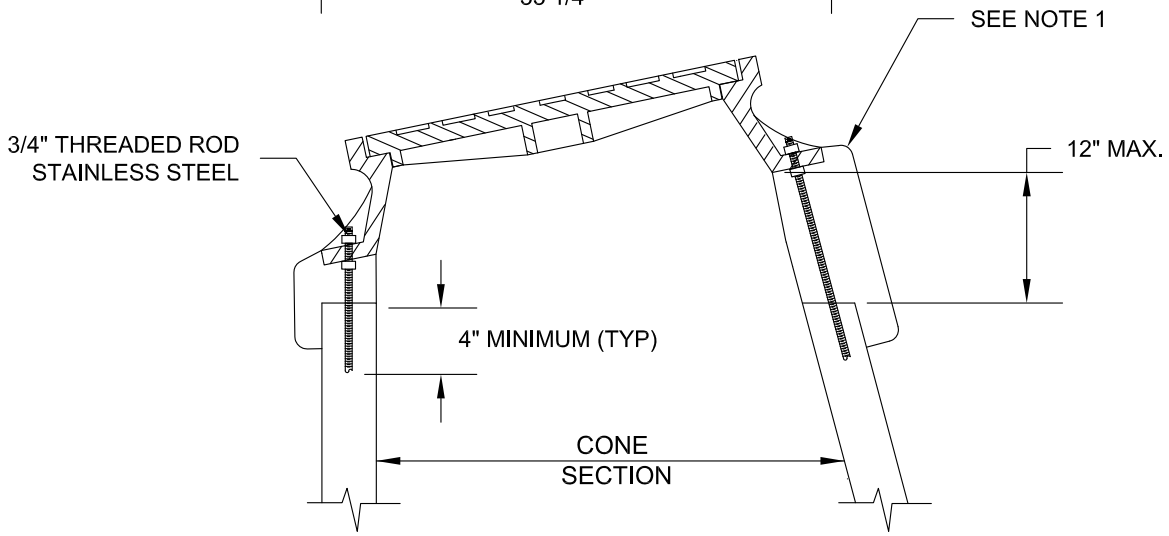

WESTERN VIRGINIA REGIONAL - CONSTRUCTION DETAIL

VAULT FRAME
AND COVER

W-16

01/01/14

1. PUBLIC HYDRANTS SHALL BE PAINTED SILVER WITH AN OIL-BASED PAINT. PRIVATE HYDRANTS SHALL ALSO BE PAINTED SILVER WITH AN OIL-BASED PAINT UNLESS OTHERWISE SPECIFIED BY THE JURISDICTIONAL FIRE MARSHALL.
2. FIRE HYDRANT SHALL BE INSTALLED 2' MIN. AND 4' MAX. FROM BACK OF CURB OR 6' MIN. AND 12' MAX. FROM EDGE OF PAVEMENT WHEN CURB IS NOT PRESENT. FIRE HYDRANT TO BE INSTALLED WITHIN RIGHT-OF-WAY OR EASEMENT LINE.
3. AREA AROUND HYDRANT AT A RADIUS OF 4' TO BE LEVEL AND UNOBSTRUCTED.
4. WATERPROOF BAGS OR OUT OF SERVICE RINGS SHALL BE PLACED OVER ALL NEWLY INSTALLED FIRE HYDRANTS.
5. HYDRANT ASSEMBLIES SHALL BE RODDED AND RESTRAINED WITH APPROVED M.J. GLAND RESTRAINTS. HIGH PRESSURE (OVER 150 PSI) ALSO REQUIRES CONCRETE THRUST BLOCKS AS SHOWN BELOW.
6. IF DURING CONSTRUCTION THE SEASONAL WATER LEVEL IS NOTED TO BE ABOVE THE DRAIN OUTLETS OF THE PROPOSED HYDRANT. THE PARTICIPATING UTILITY WILL BE NOTIFIED IMMEDIATELY SO THAT THE HYDRANT CAN BE RELOCATED TO A SUITABLE LOCATION, OMITTED, OR THE DRAIN HOLE PLUGGED.
7. TWO WRAPS OF TRACER WIRE SHALL BE WRAPPED AROUND BASE OF HYDRANT.
8. APPROVED MODELS - AVK MODEL 2780, AFC MODEL B-84-B-5, MUELLER CENTURION A423, KENNEDY K81D OR EQUIVALENT.
9. WHERE HYDRANT LATERAL(S) IS APPROVED BY THE PARTICIPATING UTILITY TO BE LONGER IN LENGTH, MAKING THE CONTINUOUS SECTION OF PIPE ON EACH SIDE OF THE GATE VALVE UNFEASIBLE, RESTRAINED PIPE JOINTS SHALL BE INSTALLED BETWEEN THE TEE AND GATE VALVE IN LIEU OF RODDING. HOWEVER, A RODDED CONTINUOUS SECTION OF PIPE SHALL ALWAYS BE INSTALLED BETWEEN THE GATE VALVE AND HYDRANT.

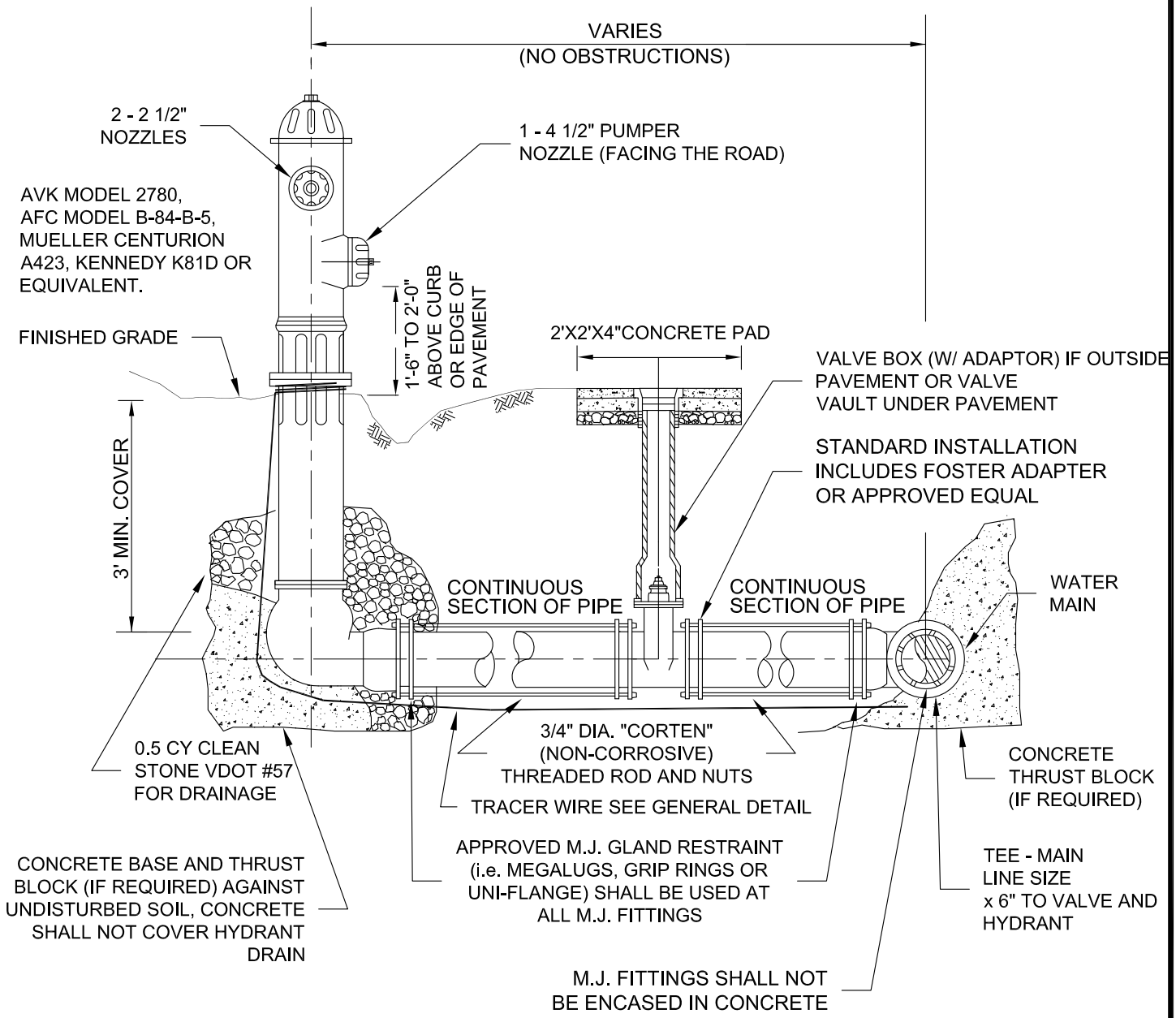

WESTERN VIRGINIA REGIONAL - CONSTRUCTION DETAIL

FIRE HYDRANT ASSEMBLY

W-17

02/10/15

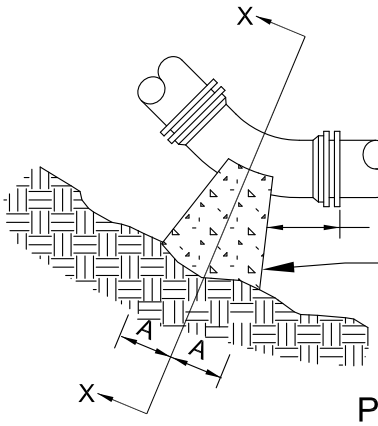

PLAN BENDS

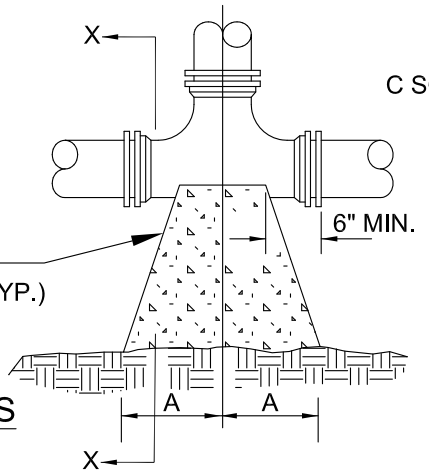

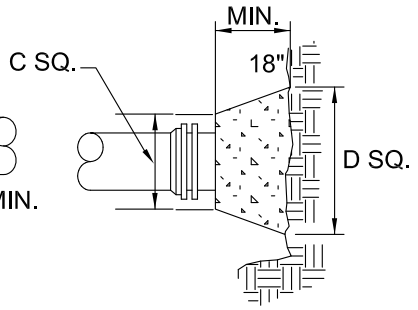

PLAN AND
ELEVATION PLUGS

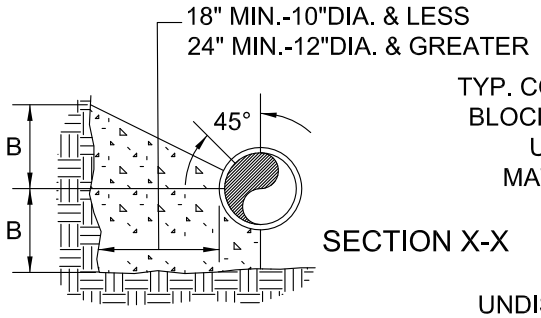

BENDS AND TEES

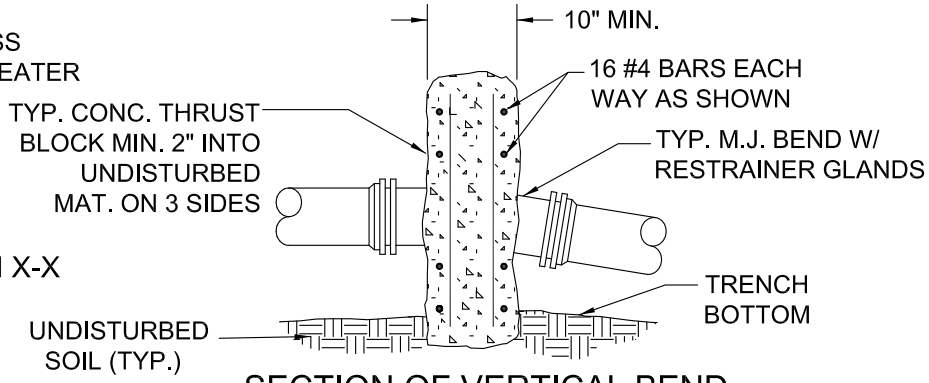

SECTION OF VERTICAL BEND

NOTES

1. FOR VERT. BEND DOWN IN EXCESS OF 11 1/4" BEND, ANCHORAGE SHALL BE DESIGNED BY ENGINEER.
2. FOR VERT. BEND UPWARD, BLOCKING TO BE SIMILAR TO THAT FOR HORZ. BEND.
3. GLANDS & BOLTS SHALL BE PROTECTED FROM CONC. WITH PLASTIC SHEETING WHEN POURING THRUST BLOCKS.
4. ALL THRUST BLOCK & SUPPORT CONCRETE SHALL BE 3000 PSI READY MIX CONCRETE.
5. THRUST BLOCKS WITH "B" DIMENSION GREATER THAN 30" SHALL HAVE THE RESTRAINED PIPE INSTALLED WITH A MINIMUM OF 4' OF COVER.
6. REFER TO "MINIMUM THRUST RESTRAINT OF PIPE JOINTS DESIGN LENGTHS" DETAIL FOR WHEN THRUST BLOCKS ARE REQUIRED TO BE USED.
7. WHEN THRUST BLOCK IS REQUIRED BUT NOT FEASIBLE TO CONSTRUCT, THRUST COLLAR SHALL BE USED. SEE "THRUST COLLAR" DETAIL.

PRESSURE = 200psi
BEARING = 2000psf
FACTOR OF SAFETY = 1.5

PIPE SIZE	90° BEND		45° BEND		22 $\frac{1}{2}$° BEND		11 $\frac{1}{4}$° BEND		TEE		PLUG	
	A	B	A	B	A	B	A	B	A	B	C	D
4"	8"	12"	8"	8"	6"	6"	6"	6"	11"	9"	10"	6"
6"	18"	12"	8"	10"	8"	8"	8"	8"	11"	10"	12"	18"
8"	18"	13"	10"	10"	8"	8"	8"	8"	11"	12"	12"	24"
10"	20"	16"	12"	14"	8"	12"	8"	12"	14"	16"	16"	30"
12"	20"	16"	12"	14"	8"	12"	8"	12"	14"	16"	16"	30"
16"	26"	20"	16"	18"	11"	13"	11"	13"	18"	20"	20"	36"
24"	82"	42"	62"	30"	44"	22"	22"	16"	82"	42"	82"	42"
30"	185"	42"	100"	42"	52"	42"	40"	30"	185"	42"	185"	42"

WESTERN VIRGINIA REGIONAL - CONSTRUCTION DETAIL

THRUST BLOCK
REQUIREMENTS

W-18

02/10/15

FACTOR OF SAFETY = 1.5

PIPE SIZE	PIPE MAT'L	90° BEND	45° BEND	22 $\frac{1}{2}$° BEND	11 $\frac{1}{4}$° BEND	VALVE/ PLUG (NOTE 2)	TEE BRANCH (NOTE 3)	REDUCER (NOTE 4)	45° VERT.	22 $\frac{1}{2}$° VERT.	11 $\frac{1}{4}$° VERT.
6"	D.I.	28'	21'	6'	3'	50'	26'	26'	21'	10'	5'
8"	D.I.	36'	21'	8'	4'	65'	41'	27'	27'	13'	7'
10"	D.I.	43'	21'	9'	5'	77'	53'	26'	32'	16'	8'
12"	D.I.	51'	21'	10'	5'	91'	67'	27'	38'	18'	9'
6"	PVC	29'	21'	6'	3'	78'	25'	40'	32'	16'	8'
8"	PVC	37'	21'	8'	4'	102'	49'	43'	42'	21'	10'
10"	PVC	44'	21'	9'	5'	122'	68'	41'	51'	25'	12'
12"	PVC	51'	21'	11'	6'	143'	89'	42'	60'	29'	15'

1. ALL JOINTS SHALL BE RESTRAINED ON BOTH SIDES OF THE FITTING AND DOCUMENTED BY THE INSPECTOR FOR THE LENGTH SHOWN UNLESS OTHERWISE INDICATED.

2. RESTRAINED LENGTH SHOWN REFERS TO ANY DESIGNED OR POTENTIAL LINE STOP, INCLUDING ALL GATE VALVES.

3. RESTRAINED LENGTH SHOWN REFERS TO THE BRANCH LINE ONLY. THE CONTINUOUS PIPE LENGTH OF THE MAIN RUN SHALL BE A MINIMUM OF 10' ON EACH SIDE OF THE TEE.

4. RESTRAINED LENGTH SHOWN IS BASED ON REDUCING PIPE DIAMETER TO ONE SIZE SMALLER THAN PIPE LISTED (ANY OTHER DIAMETER REDUCTION WILL REQUIRE ADDITIONAL CALCULATIONS BEFORE INSTALLATION). RESTRAINED LENGTH SHOWN IS UPSTREAM ON THE LARGE SIDE OF THE REDUCER.

5. 12" AND SMALLER DIAMETER: IF UNDER 150 PSI WORKING PRESSURE, RESTRAINED JOINT(S) ARE TO BE USED. IF EQUAL TO OR OVER 150 PSI WORKING PRESSURE, BOTH THRUST BLOCK(S) AND RESTRAINED JOINT(S) SHALL BE USED.

   LARGER THAN 12" DIAMETER: IF UNDER 100 PSI WORKING PRESSURE, RESTRAINED JOINT(S) ARE TO BE USED. IF EQUAL TO OR OVER 100 PSI WORKING PRESSURE, BOTH THRUST BLOCK(S) AND RESTRAINED JOINT(S) SHALL BE USED (UNLESS OTHERWISE APPROVED BY THE PARTICIPATING UTILITY).

6. FOR RESTRAINED JOINT PIPING REQUIREMENTS AT FITTING R.J. PVC AND R.J. DIP MAY BE USED INTERCHANGEABLY WITH APPROVAL FROM PARTICIPATING UTILITY. CONTRACTOR MUST PLAN ACCORDINGLY FOR THE DIFFERENCE IN PVC AND DIP BELL AND SPIGOT DIMENSIONS.

WESTERN VIRGINIA REGIONAL - CONSTRUCTION DETAIL

MINIMUM THRUST RESTRAINT
OF PIPE JOINTS
DESIGN LENGTHS

02/10/15

W-19

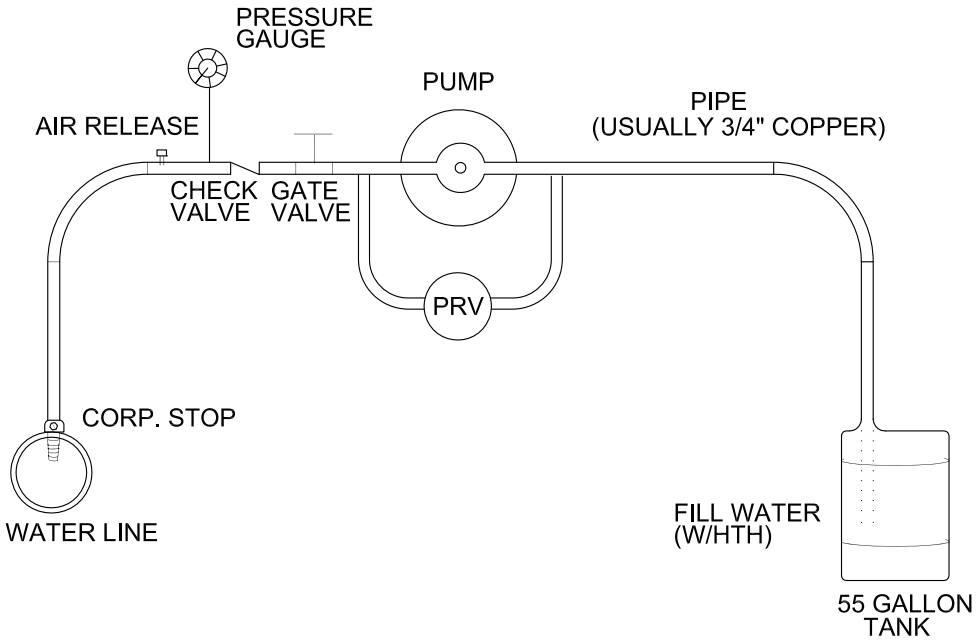

TYPICAL WATER PRESSURE TEST RIG

WESTERN VIRGINIA REGIONAL - CONSTRUCTION DETAIL

TYPICAL WATER
PRESSURE TEST RIG

01/01/14

W-20

1. TAPPING SLEEVE SHALL BE POWERSEAL MODEL 3490 TYPE 304 STAINLESS STEEL WITH CARBON STEEL FLANGE, ROMAC'S MODEL SST III, FORD MODEL FTSS WITH CARBON STEEL FLANGE OR APPROVED EQUIVALENT. SLEEVE SHALL BE RATED AT 100 PSI OVER WORKING PRESSURE AND MUST HAVE A TEST PLUG.
2. TAPPING VALVE SHALL BE AVK RESILIENT SEATED GATE VALVE SERIES 25 MJFL, MUELLER T-2360 RESILIENT WEDGE TAPPING VALVE WITH MJFL, OR AFC SERIES 2500 RESILIENT WEDGE TAPPING VALVE WITH MJFL. VALVE SHALL BE RATED AT 250 PSI.
3. TAPPING SLEEVE AND VALVE SHALL BE FULL PORT TO ACCEPT FULL SIZE SHELL CUTTER.
4. STEEL FLANGE SHALL MEET AWWA C207.
5. SIZE-ON-SIZE TAPPING NOT ALLOWED UNLESS APPROVED BY PARTICIPATING UTILITY.

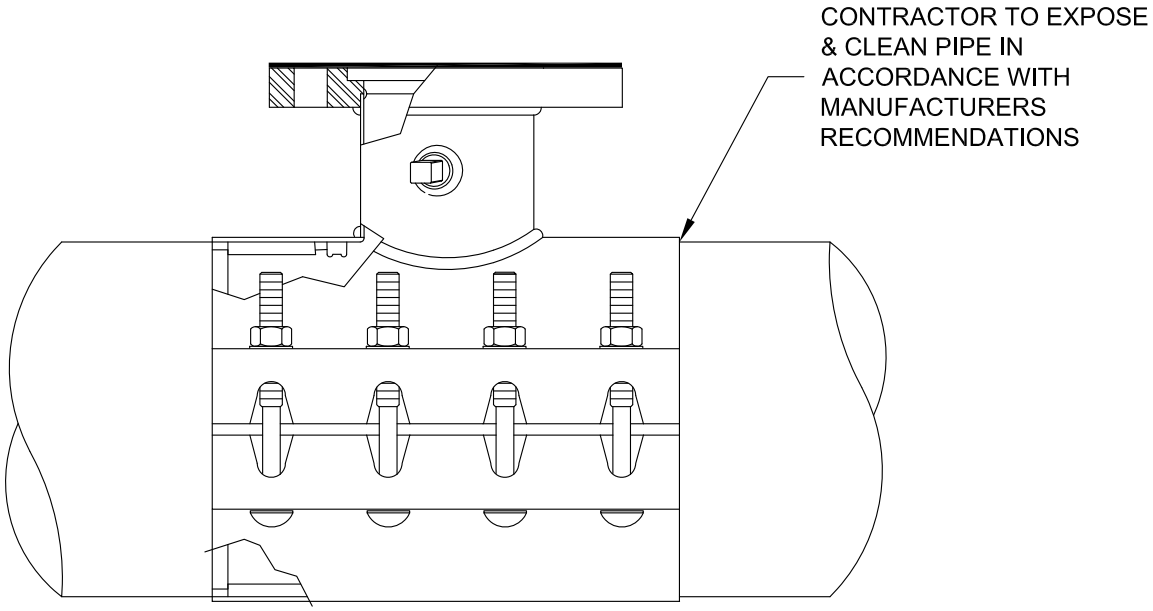

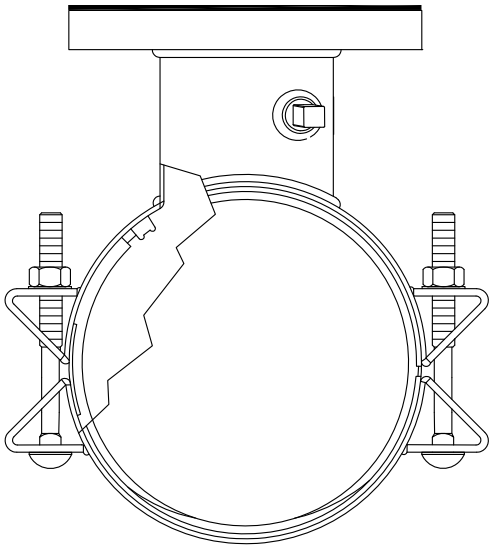

WESTERN VIRGINIA REGIONAL - CONSTRUCTION DETAIL

TAPPING SLEEVE
AND VALVE

W-21

01/01/14

INSTALLATION OF DUCTILE IRON WATER MAINS
TABLE 3 AWWA C600-05
Maximum Joint Deflection Full Length of Pipe - Push on Type Joint

		Maximum Offset - S* (Inches)		Approximate Radius of Curve - R* Produced by Succession of Joints	
Nominal Pipe Size (inches)	Deflection Angle - θ (degree)	Joint Length 18-Feet	Joint Length 20-Feet	Joint Length 18-Feet	Joint Length 20-Feet
3	5°	19	21	205	230
4	5°	19	21	205	230
6	5°	19	21	205	230
8	5°	19	21	205	230
10	5°	19	21	205	230
12	5°	19	21	205	230
14	3°	11	12	340	380
16	3°	11	12	340	380
18	3°	11	12	340	380
20	3°	11	12	340	380
24	3°	11	12	340	380
30	3°	11	12	340	380

* SEE FIGURE 4.
For 14-inch and larger push-on joints, maximum deflection angle may be larger than shown above. Consult the manufacturer.

INSTALLATION OF DUCTILE IRON WATER MAINS
TABLE 4 AWWA C600-05
Maximum Joint Deflection Full Length of Pipe - Mechanical Joint Pipe

		Maximum Offset - S* (Inches)		Approximate Radius of Curve - R* Produced by Succession of Joints	
Nominal Pipe Size (inches)	Deflection Angle - θ (degree)	Joint Length 18-Feet	Joint Length 20-Feet	Joint Length 18-Feet	Joint Length 20-Feet
3	8°-18"	31	35	125	140
4	8°-18"	31	35	125	140
6	7°-07"	27	30	145	160
8	5°-21"	20	22	195	220
10	5°-21"	20	22	195	220
12	5°-21"	20	22	195	220
14	3°-35"	13.5	15	285	320
16	3°-35"	13.5	15	285	320
18	3°-00"	11	12	340	380
20	3°-00"	11	12	340	380
24	2°-23"	9	10	450	500

* SEE FIGURE 4.

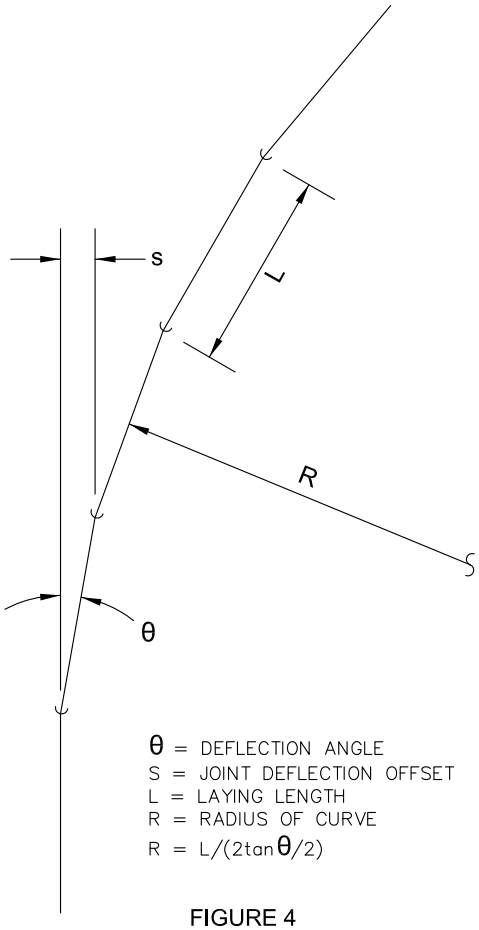

FIGURE 4

WESTERN VIRGINIA REGIONAL - CONSTRUCTION DETAIL

DUCTILE IRON PIPE
DEFLECTION ALLOWANCE TABLES

01/01/14

W-22

1. CONCRETE SHALL BE 3000 P.S.I. READY MIX CONCRETE.
2. REINFORCING BARS SHALL BE DEFORMED, AND TIED TOGETHER.
3. TRENCH BOTTOM WIDTH IN VICINITY OF THRUST COLLAR INSTALLATION SHALL BE THE MINIMUM WIDTH.
4. BACKFILL AND COMPACT IN 6" LAYERS.
5. PLACE THRUST COLLAR ON ONE FULL JOINT OF PIPE.
6. LAST JOINT OF PIPE WITH THRUST COLLAR TO BE MECHANICAL JOINT PIPE.
7. PLACE RESTRAINED JOINT THRUST RING 4' FROM FITTING END OF PIPE.
8. FORMS SHALL BE USED WHEN PLACING CONCRETE TO PREVENT CONCRETE FROM INFILTRATING JOINTS.
9. ALLOW MINIMUM OF 3 DAYS FOR CONCRETE TO OBTAIN STRENGTH BEFORE WATERLINE BECOMES ACTIVE.
10. JOINT RESTRAINTS SHALL BE INSTALLED LIP TO LIP AND WRAPPED WITH POLYETHYLENE TO PREVENT CONCRETE INTRUSION INTO WEDGE POCKET.

THREADED ROD SIZING CHART

PIPE SIZE (INCHES)	ROD DIAMETER (INCHES)	NUMBER OF RODS REQUIRED
6	3/4	4
8	3/4	4
10	3/4	4
12	3/4	6
16	3/4	12
20	3/4	14
24	1	16
30	1	20

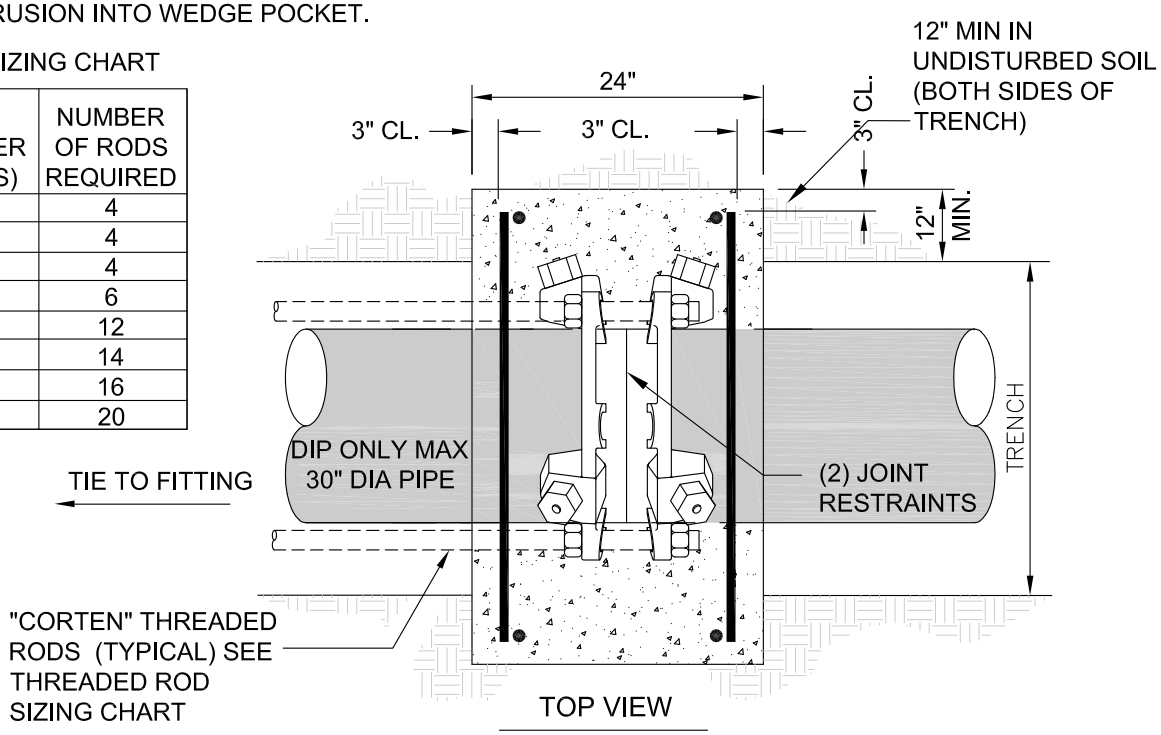

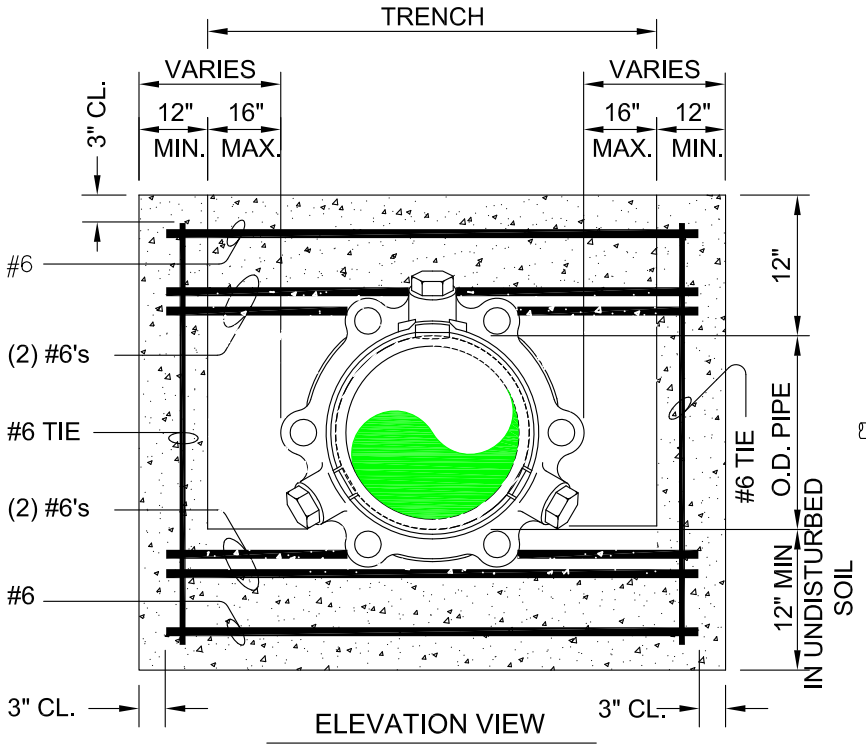

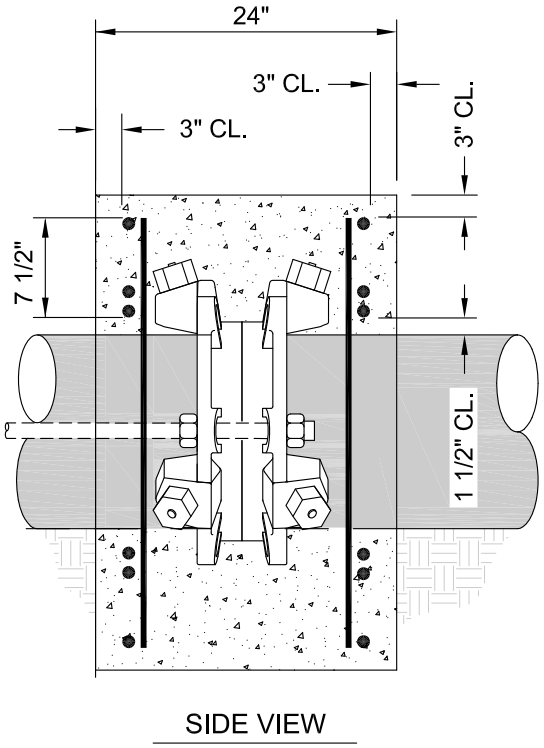

WESTERN VIRGINIA REGIONAL - CONSTRUCTION DETAIL

THRUST COLLAR DETAIL

W-23

01/01/14